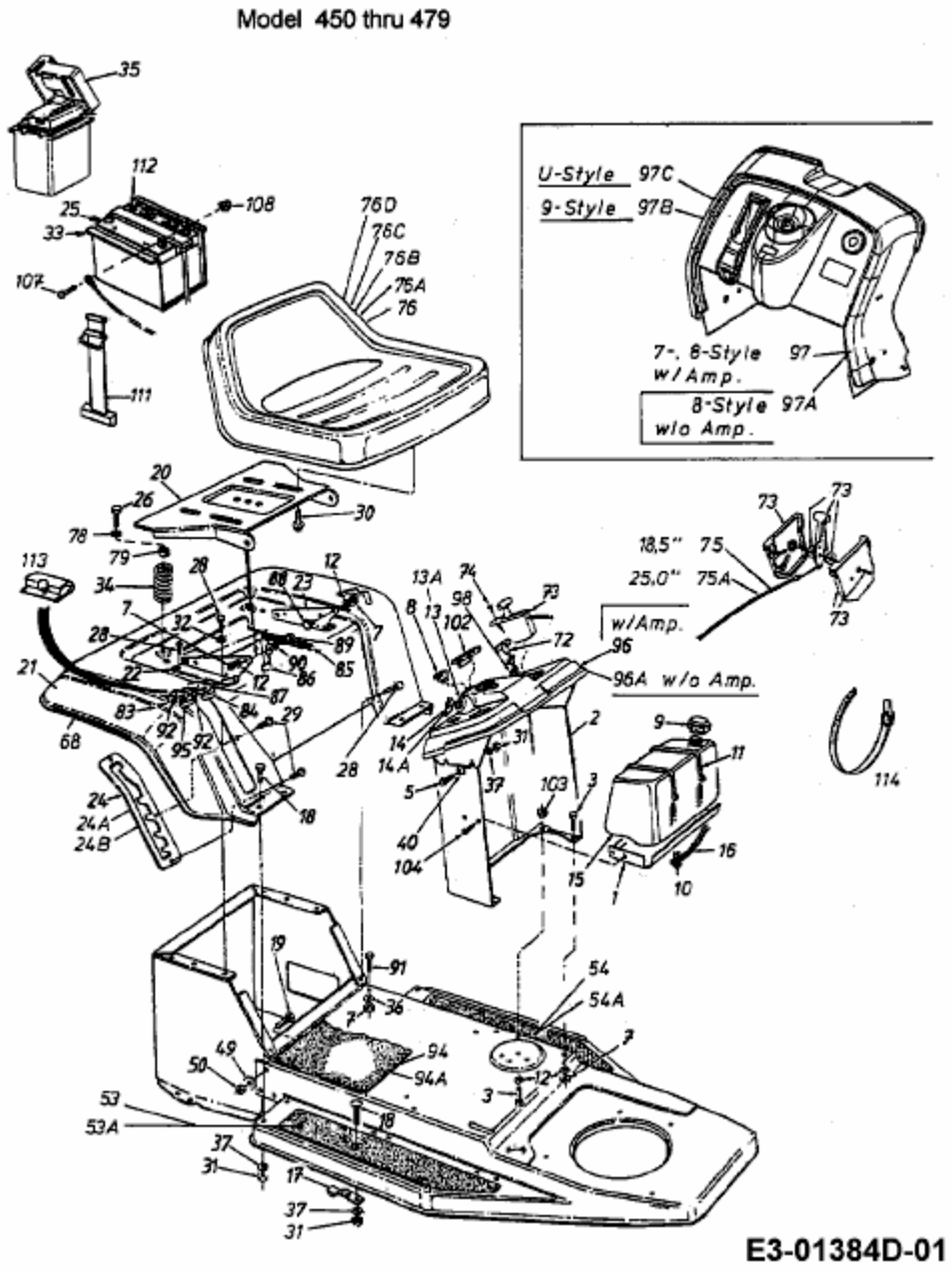J/130 > 13AY478A678 (1999) > ARMATURENBRETT, SITZ, TANK