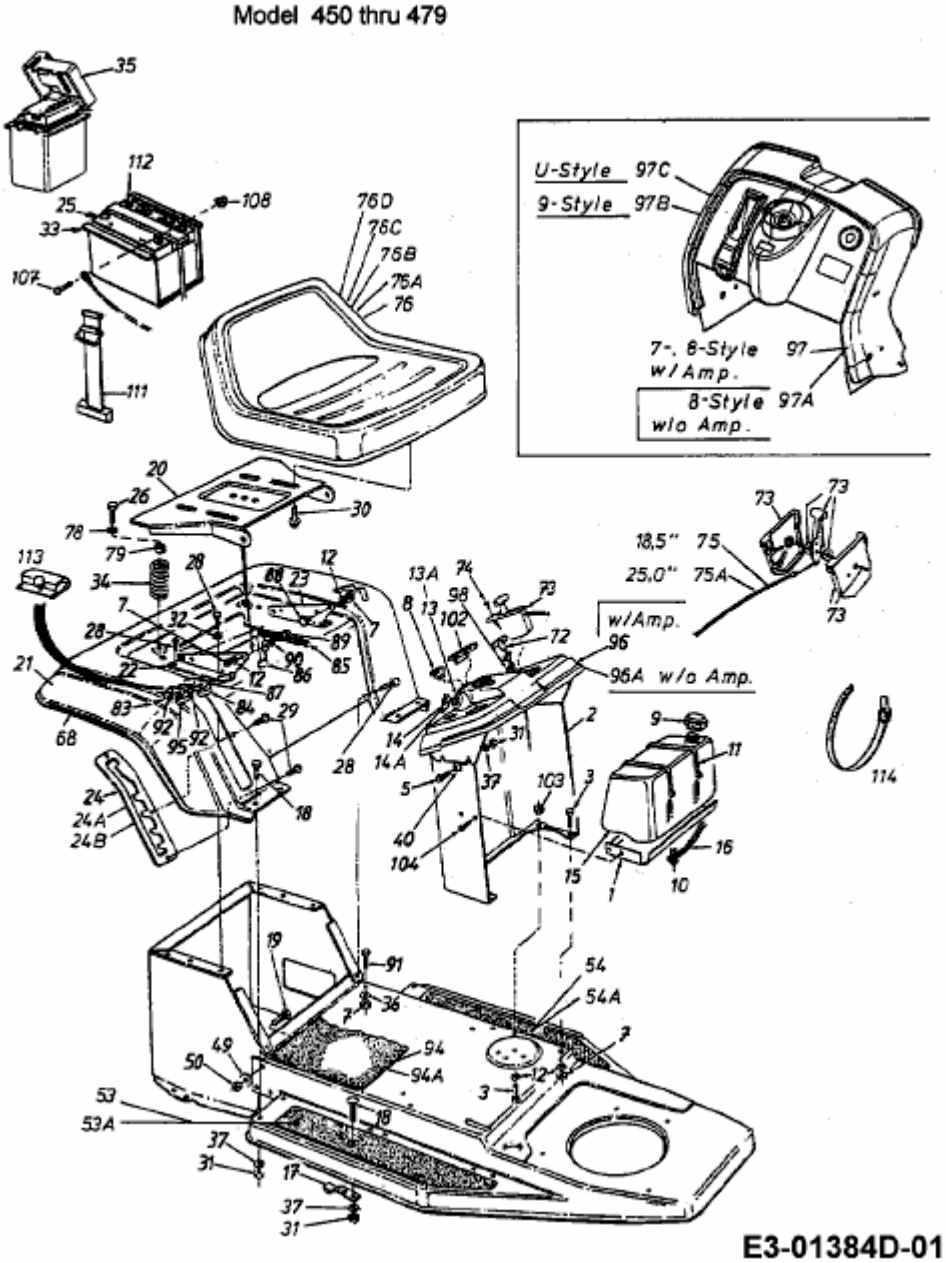J/130 > 13AY478A678 (1998) > ARMATURENBRETT, SITZ, TANK