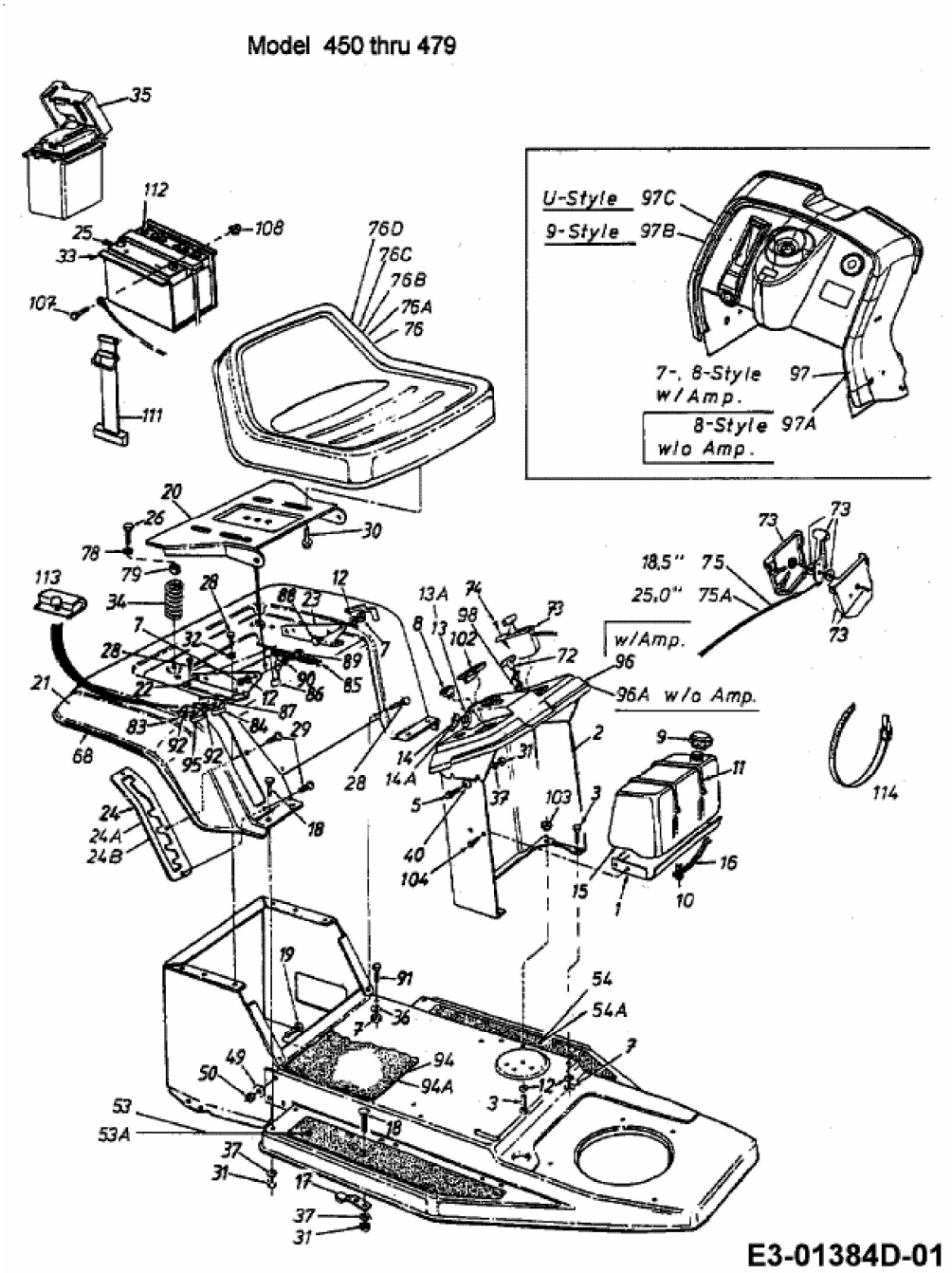
Model 450 thru 479
U-Style 97C
9-Style 97B
7-, 8-Style 97
w/Amp.
8-Style 97A
w/o Amp.
18,5" 75
25,0" 75A
w/Amp.
96
96A w/o Amp.
E3-01384D-01