AJ 5190 > 13AX504J643 (2005) > PEDALE

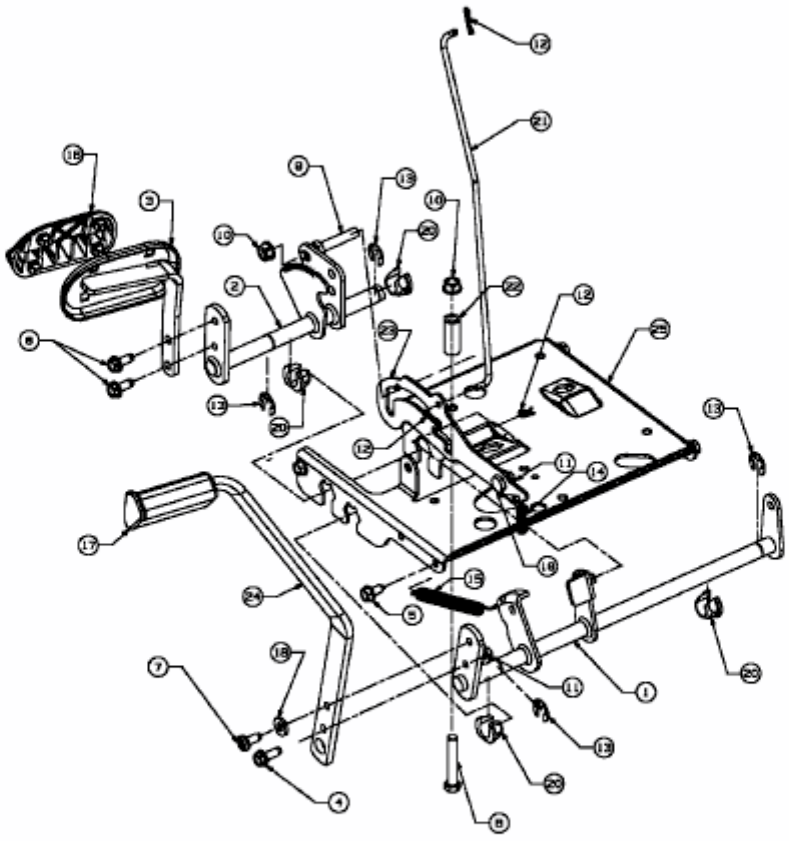

E3-02031A-01