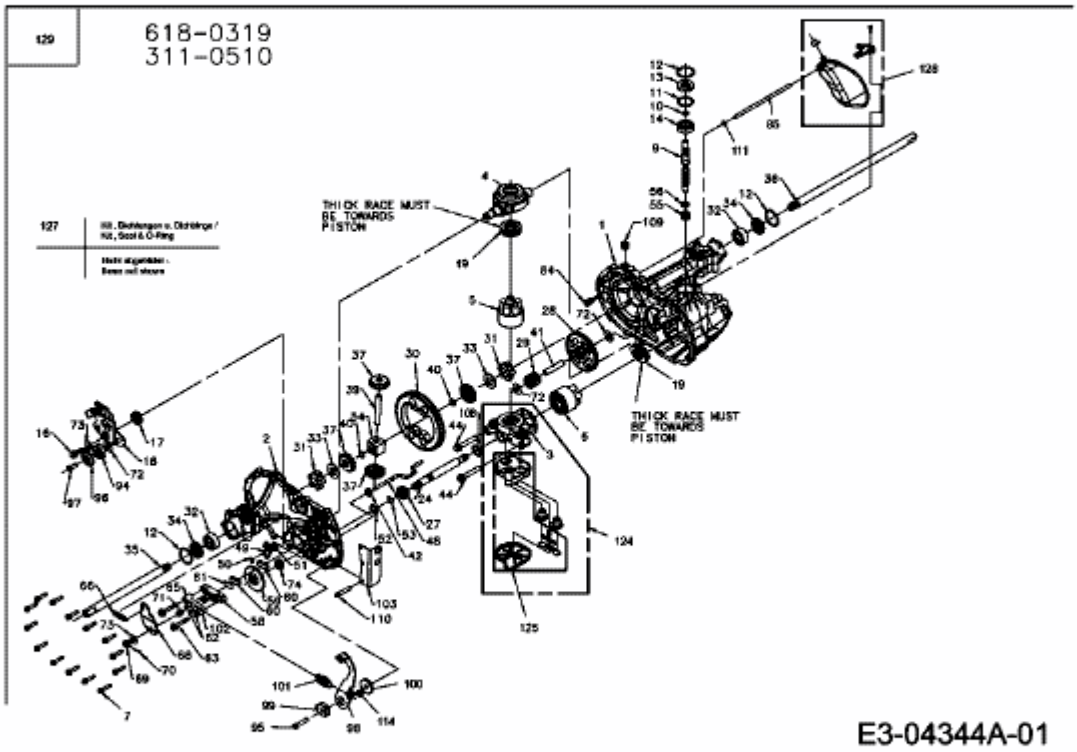13AV91AF603 (2009) > HYDROSTAT