13AV91AF603 (2009) > RAHMEN

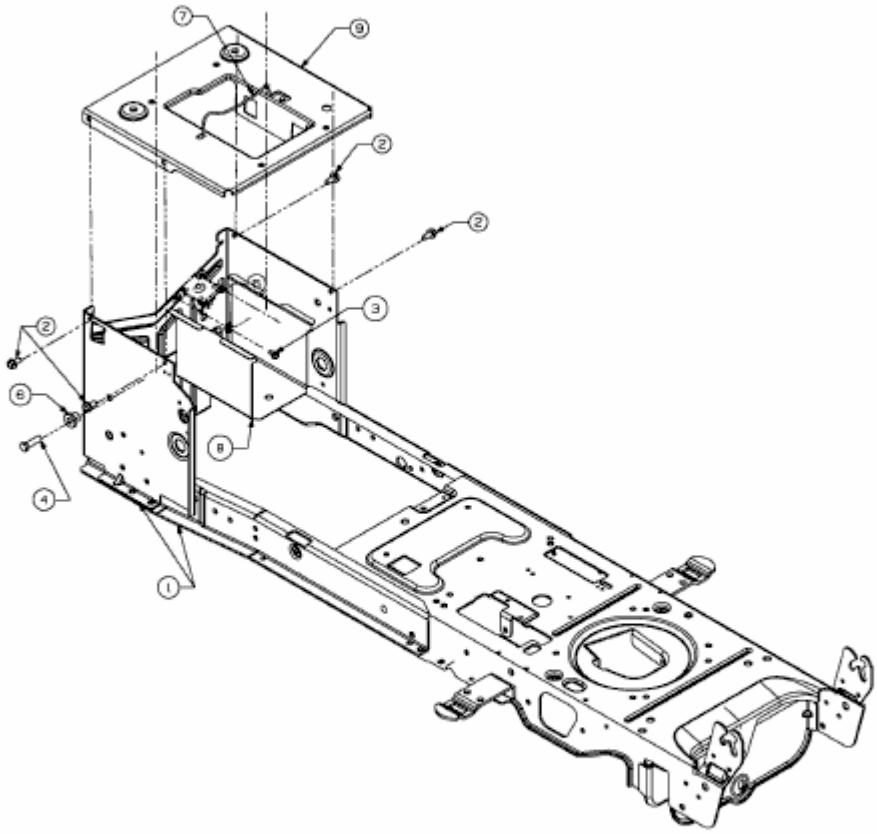

E3-04534A-01