MF 36-15 RA > 13AV781E695 (2008) > SCHALTPLAN

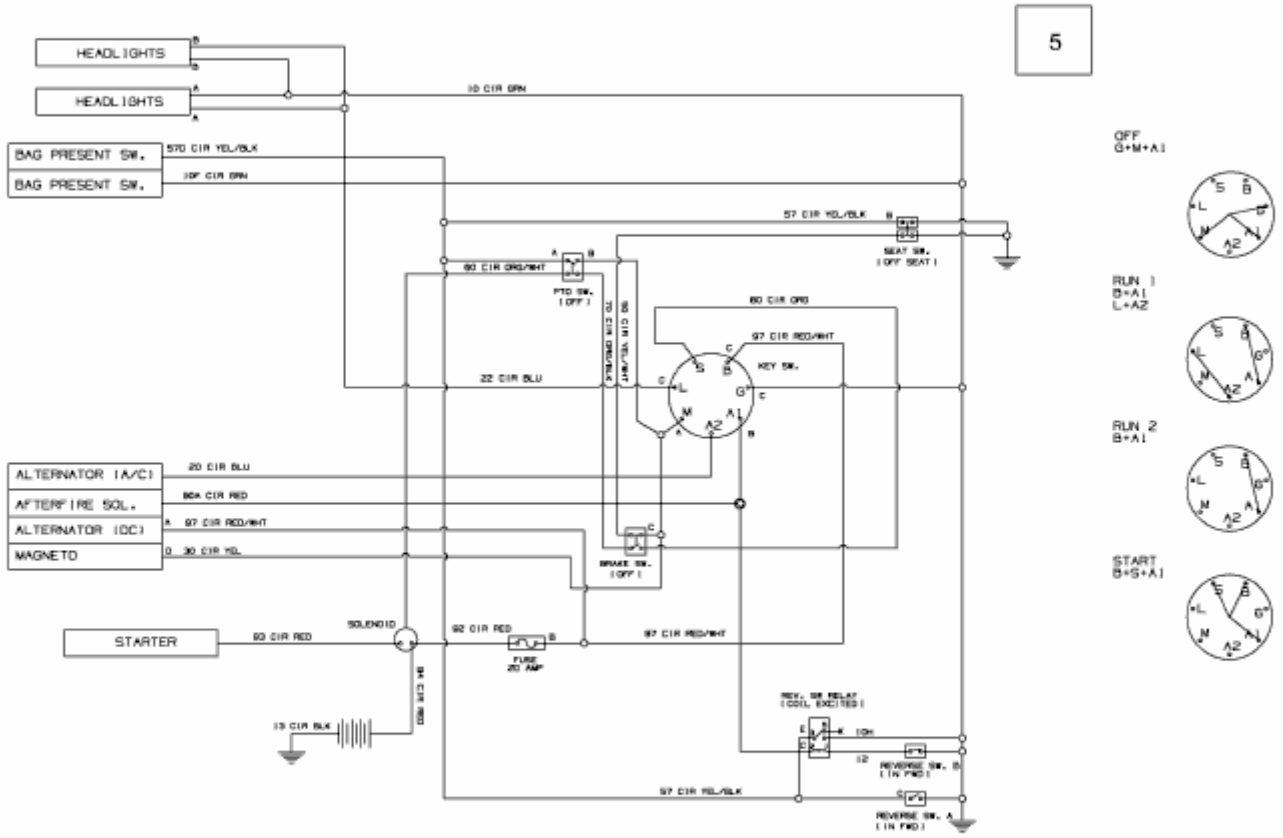

E3-03888B-02