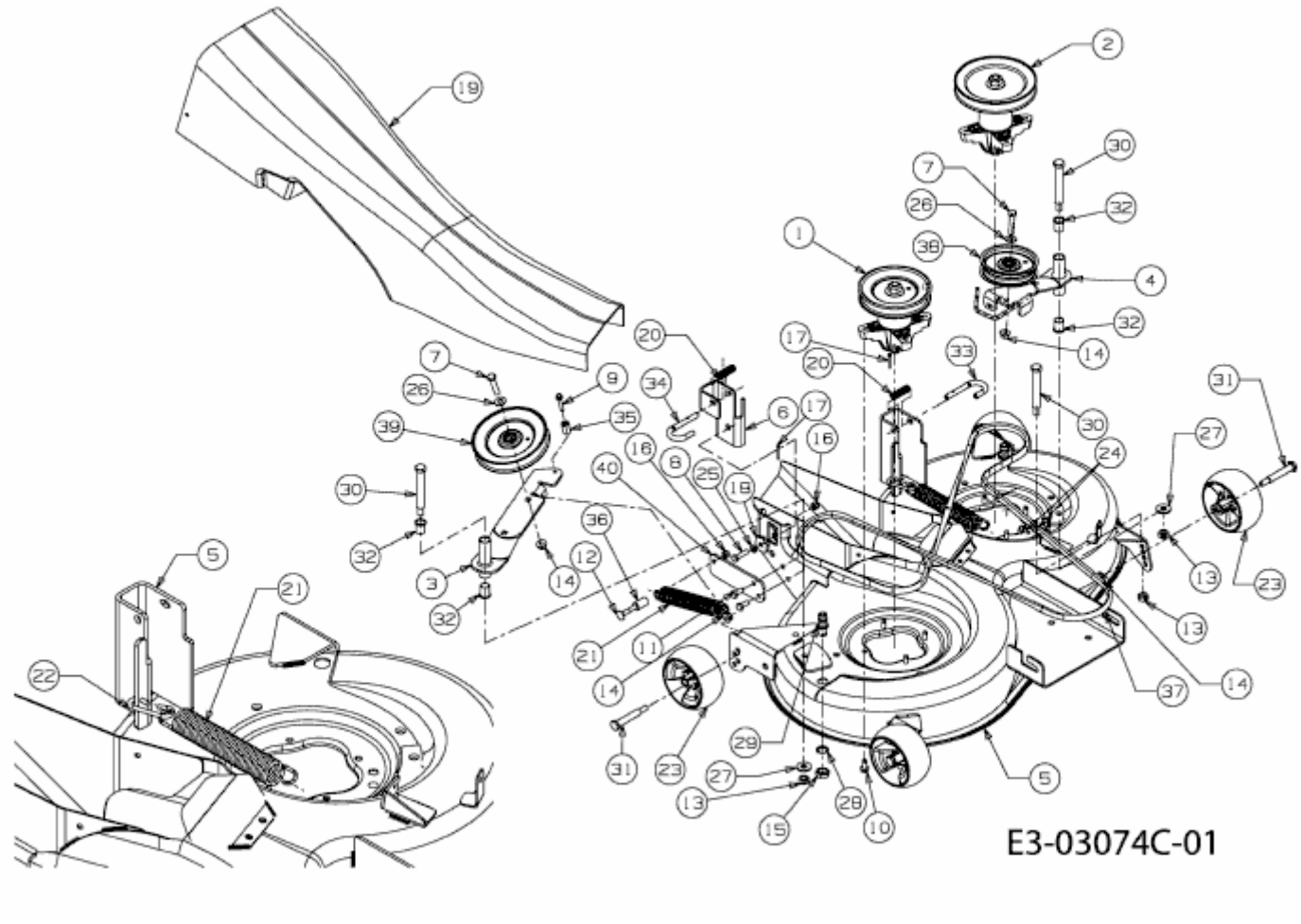HE 5150 > 13AV51YE443 (2009) > MÄHWERK E (36"/92CM)