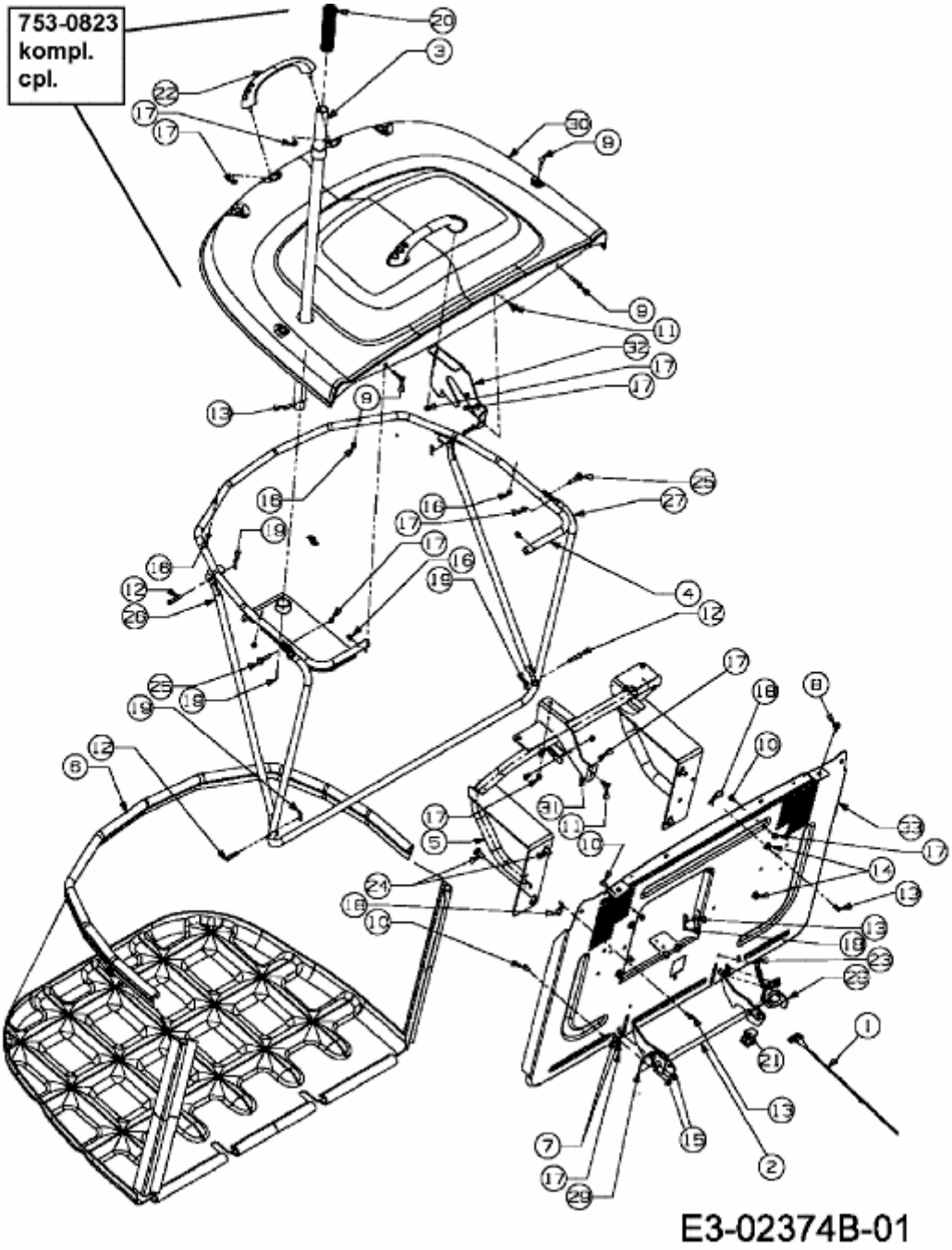MF 36-15 RD > 13AV51CE695 (2007) > GRASFANGVORRICHTUNG