272-105 TWINH > 13AU997N615 (2014) > VORDERACHSE

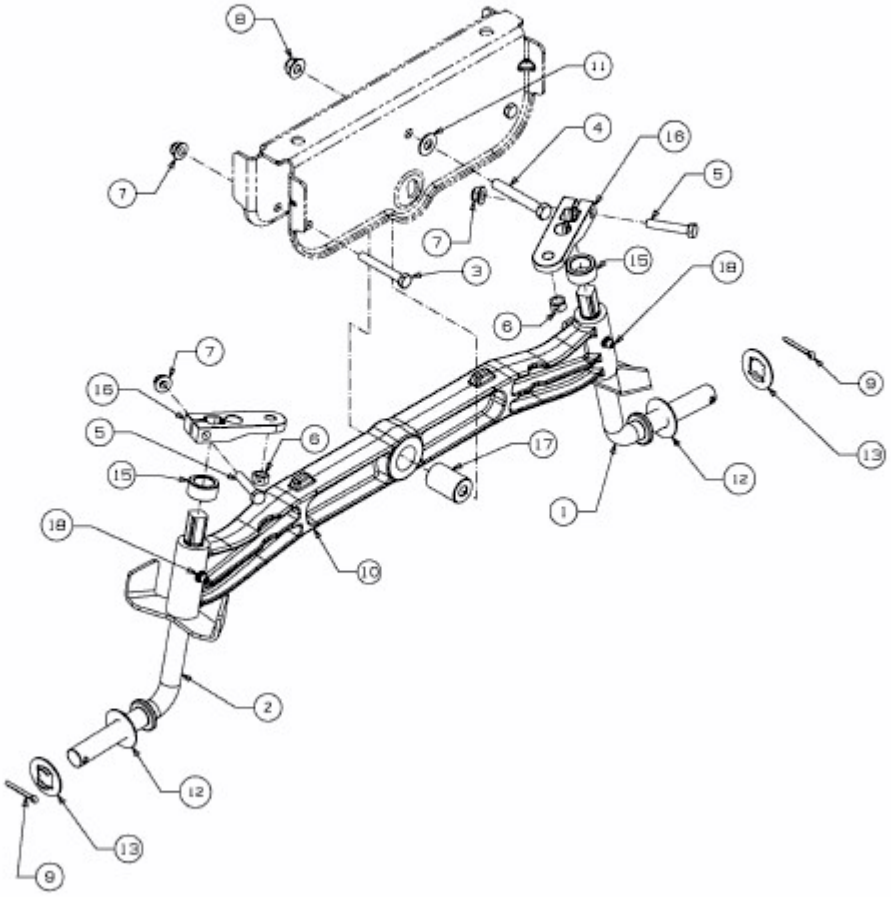

E3-07523C-01