RANGER 3 XL (22/105 H) > 13AU993N661 (2012) > HIGH LIFT MESSER

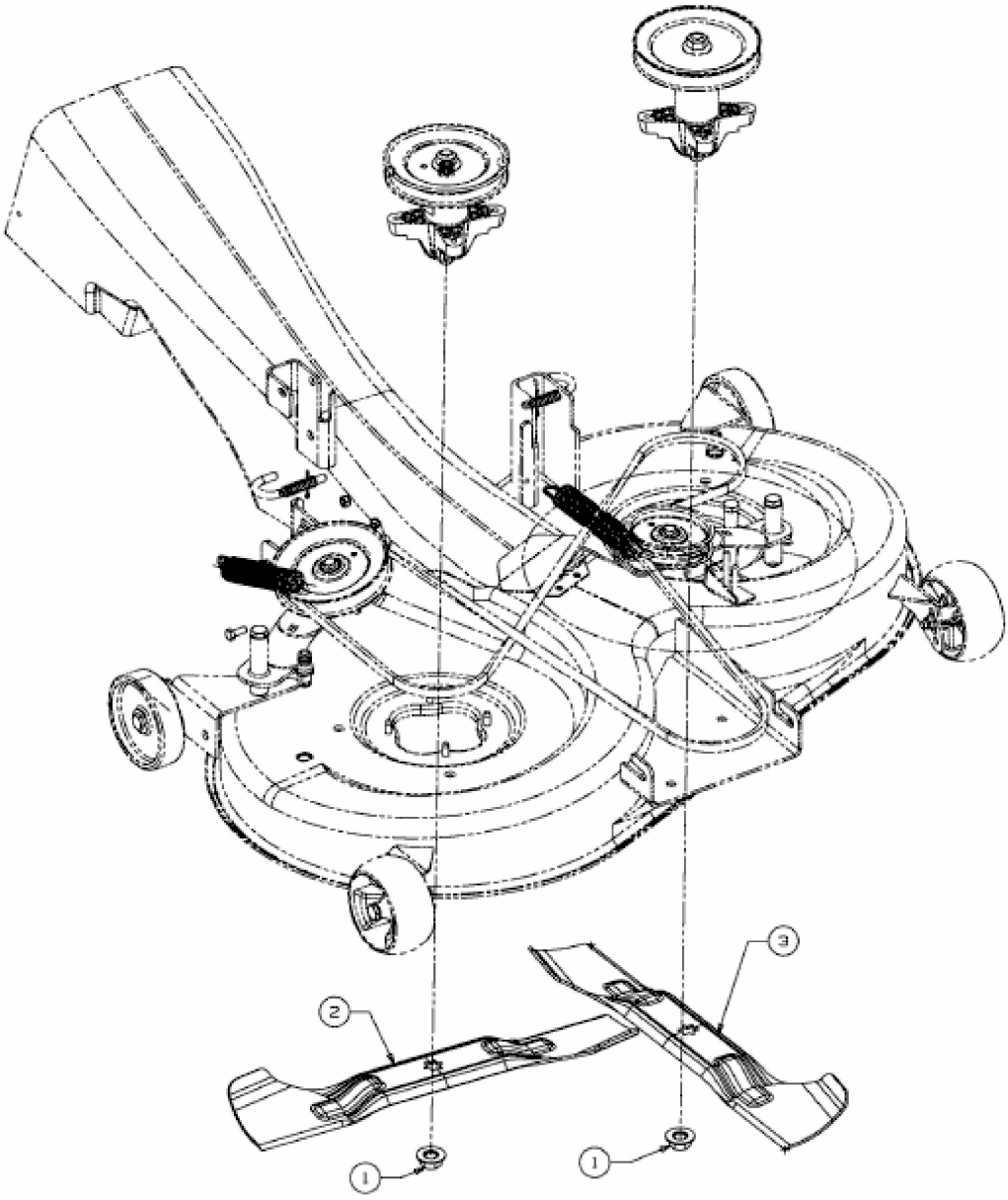

E3-03077A-01