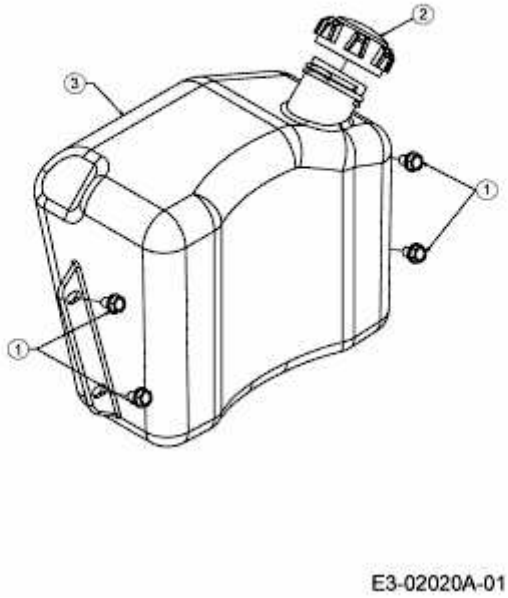220/105 TWIN HYDRO > 13AU497N615 (2008) > TANK