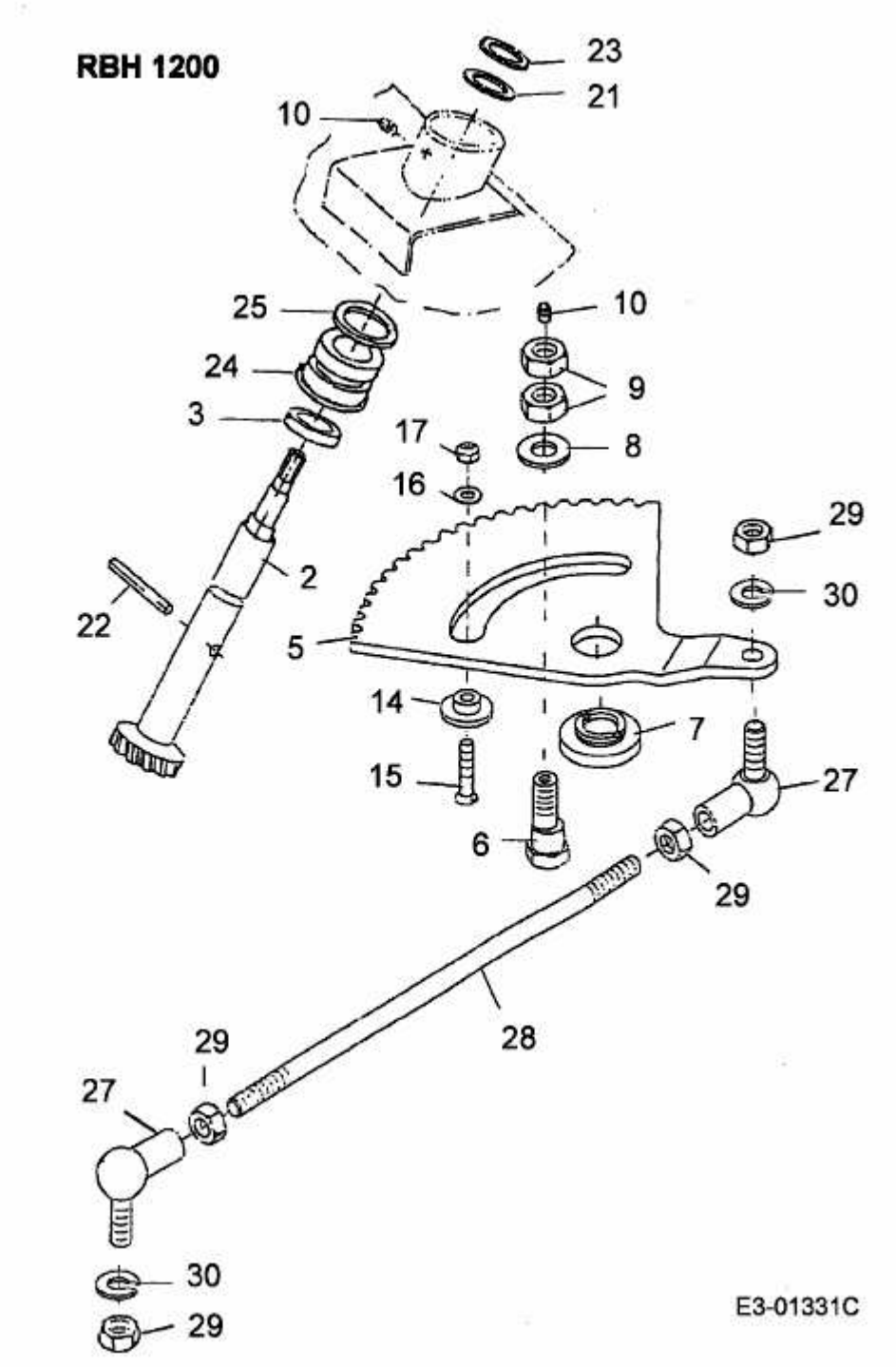
RBH 1200
23
21
10
25
10
24
9
3
17
8
16
29
2
30
22
5
14
7
15
27
6
29
28
29
27
30
29
E3-01331C