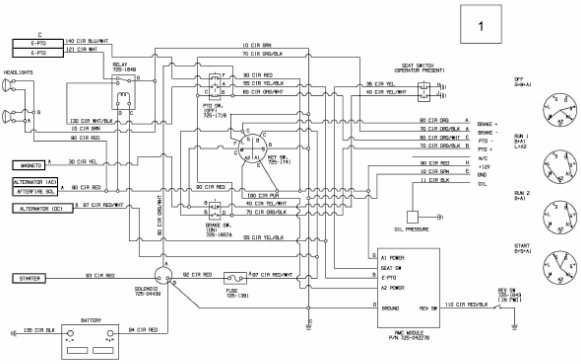
1
C
E-PTO
E-PTO
140 CIR BLU/WHT
121 CIR WHT
10 CIR BRN
70 CIR ORG/BLK
HEADLIGHTS
RELAY
725-1849
80 CIR RED
155 CIR YEL/BLK
60 CIR ORG/WHT
PTO SW.
725-1116
130 CIR WHT/BLK
15 CIR BRN
90 CIR RED
KEY SW.
725-1741
MAGNETO
90 CIR YEL
ALTERNATOR (AC)
AFTERFIRE SOL.
90 CIR RED
ALTERNATOR (DC)
97 CIR RED/WHT
90 CIR RED
100 CIR PUR
40 CIR YEL/WHT
70 CIR ORG/BLK
BRAKE SW.
725-1867A
155 CIR YEL/BLK
80 CIR ORG/WHT
STARTER
93 CIR RED
SOLENOID
725-3442A
92 CIR RED
FUSE
725-1381
97 CIR RED/WHT
BATTERY
135 CIR BLK
94 CIR RED
SEAT SWITCH
(OPERATOR PRESENT)
36 CIR YEL
40 CIR YEL/WHT
80 CIR ORG
70 CIR ORG/BLK
80 CIR ORG/WHT
70 CIR ORG/BLK
90 CIR RED
10 CIR BRN
11 CIR BLK
OIL PRESSURE
A1 POWER
SEAT SW
E-PTO
A2 POWER
GROUND
REV SW
110 CIR RED/BLK
RMC MODULE
P/N 725-0422B
BRAKE +
BRAKE -
PTO -
PTO +
N/C
+12V
GND
OIL
OFF
SHAFT
RUN 1
SHAFT
LAMP
RUN 2
SHAFT
START
SHAFT
SEE SW
725-1849
(IN PMC)

E3-02896A-02