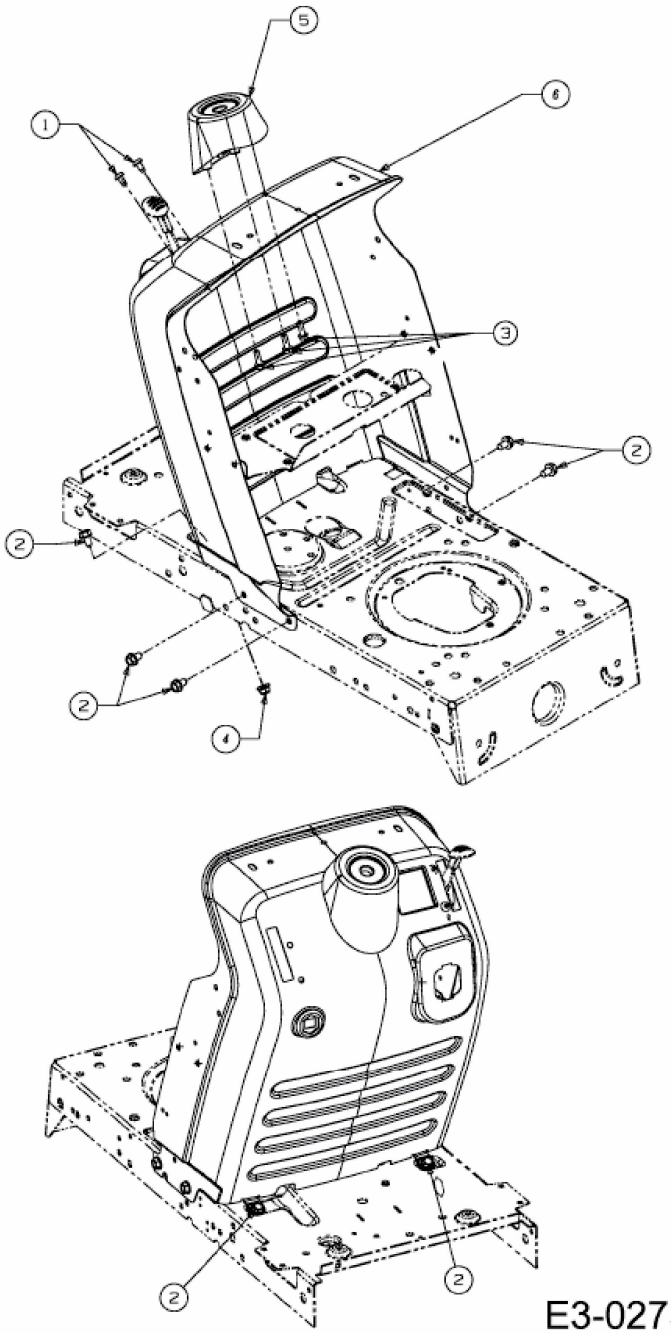SILVER TRAK > 13AT793-677 (2010) > ARMATURENBRETT