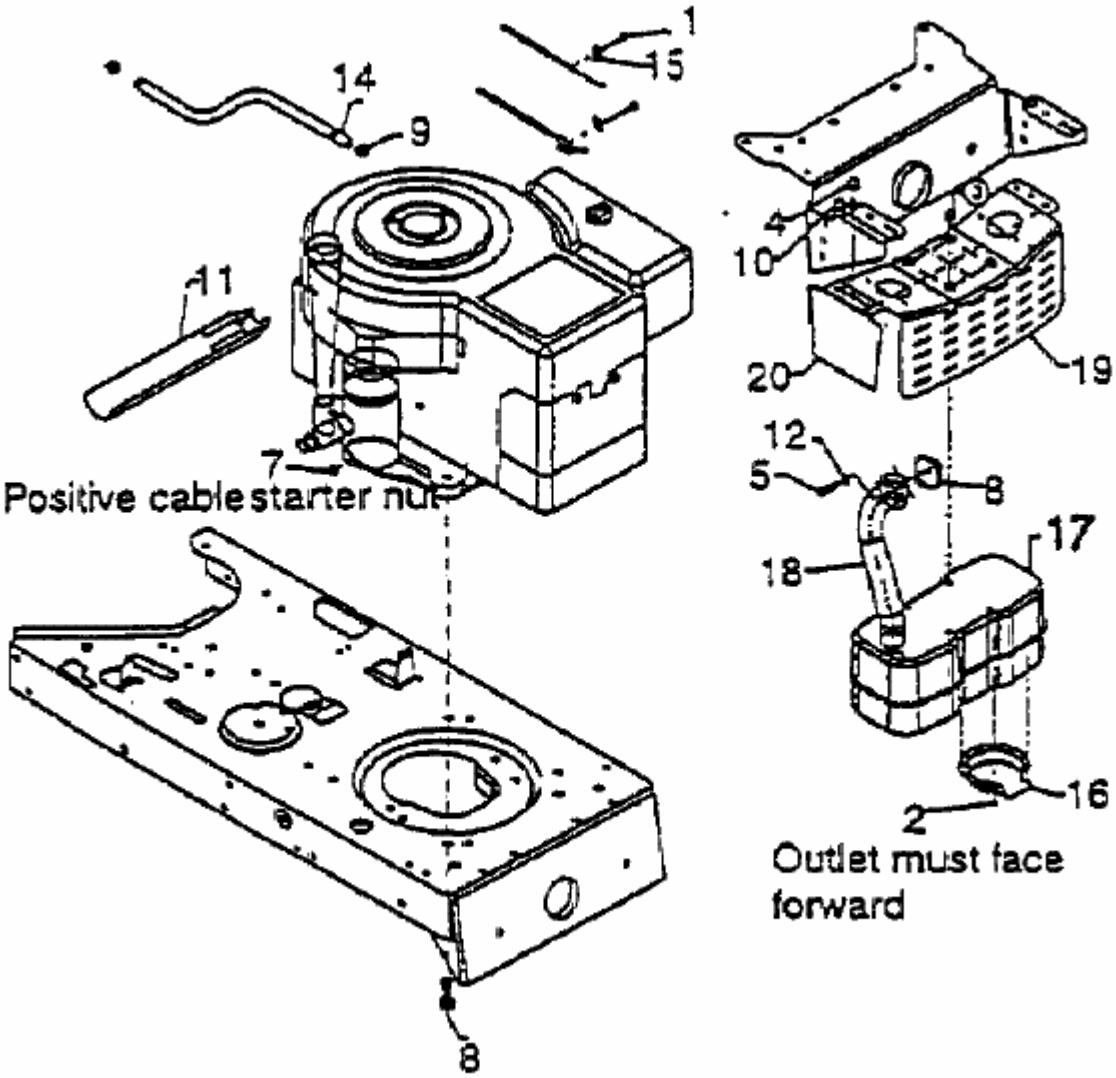
1
15
14
9
4
10
11
20
19
12
5
8
7
Positive cable starter nut
17
18
16
2
Outlet must face forward
8