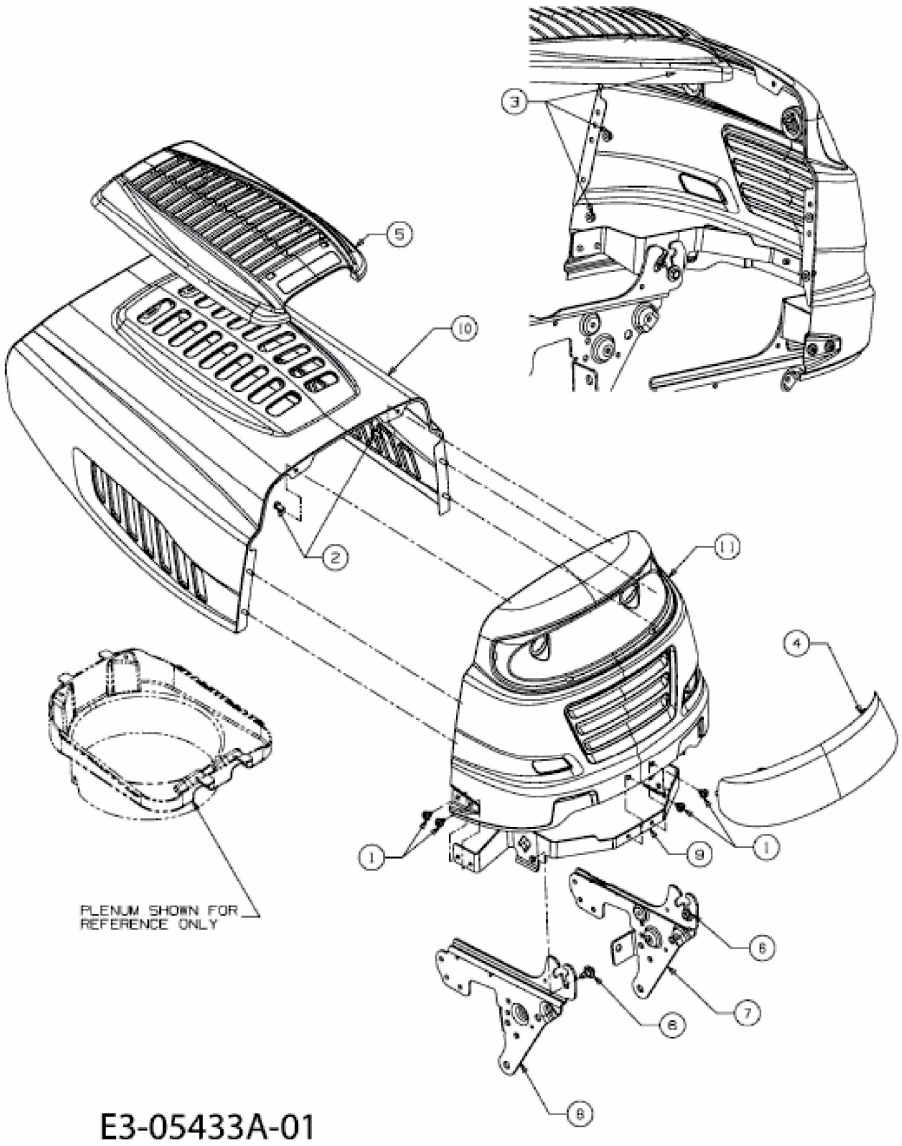16/92 H > 13AT495E618 (2010) > MOTORHAUBE 5-STYLE