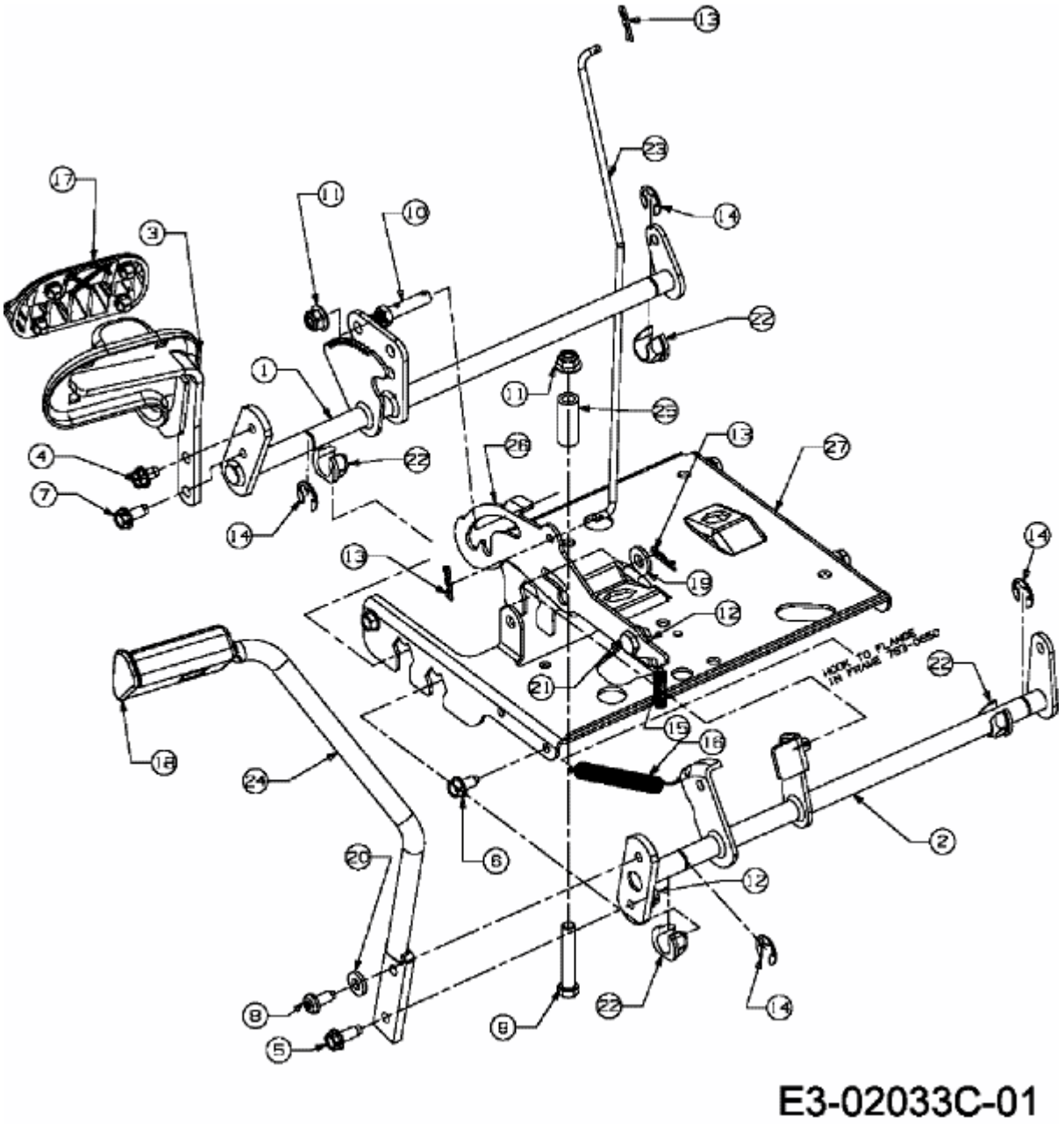180/105 H > 13AT493N678 (2007) > PEDALE