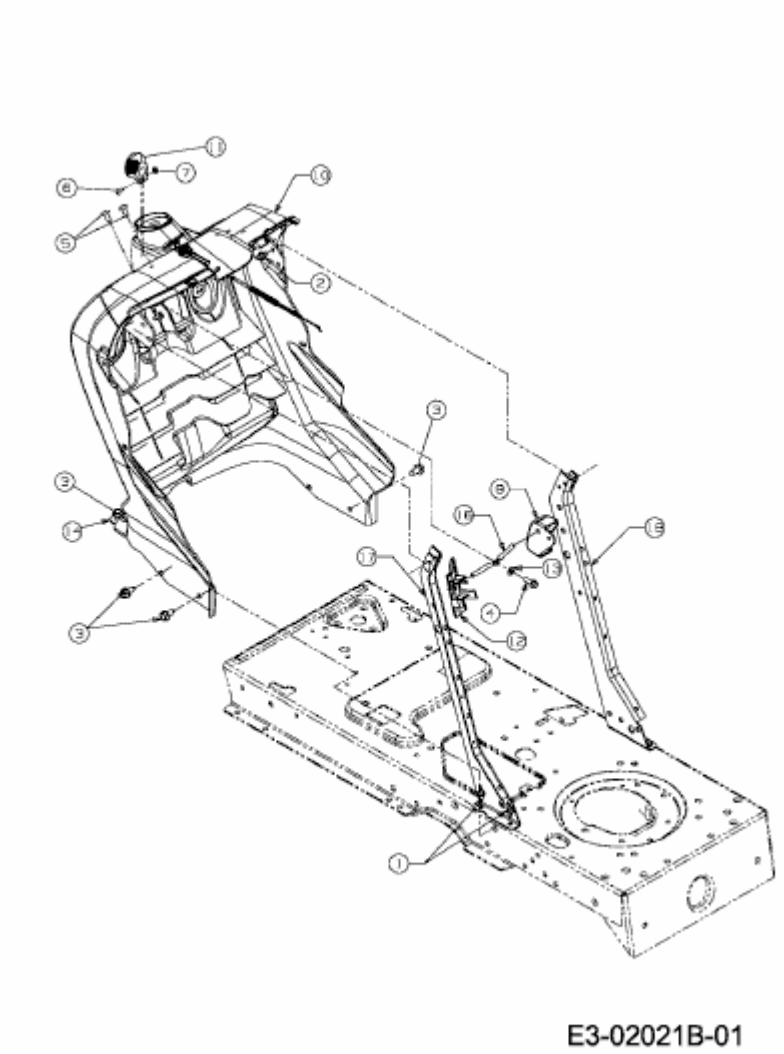13AT491N684 (2008) > ARMATURENBRETT