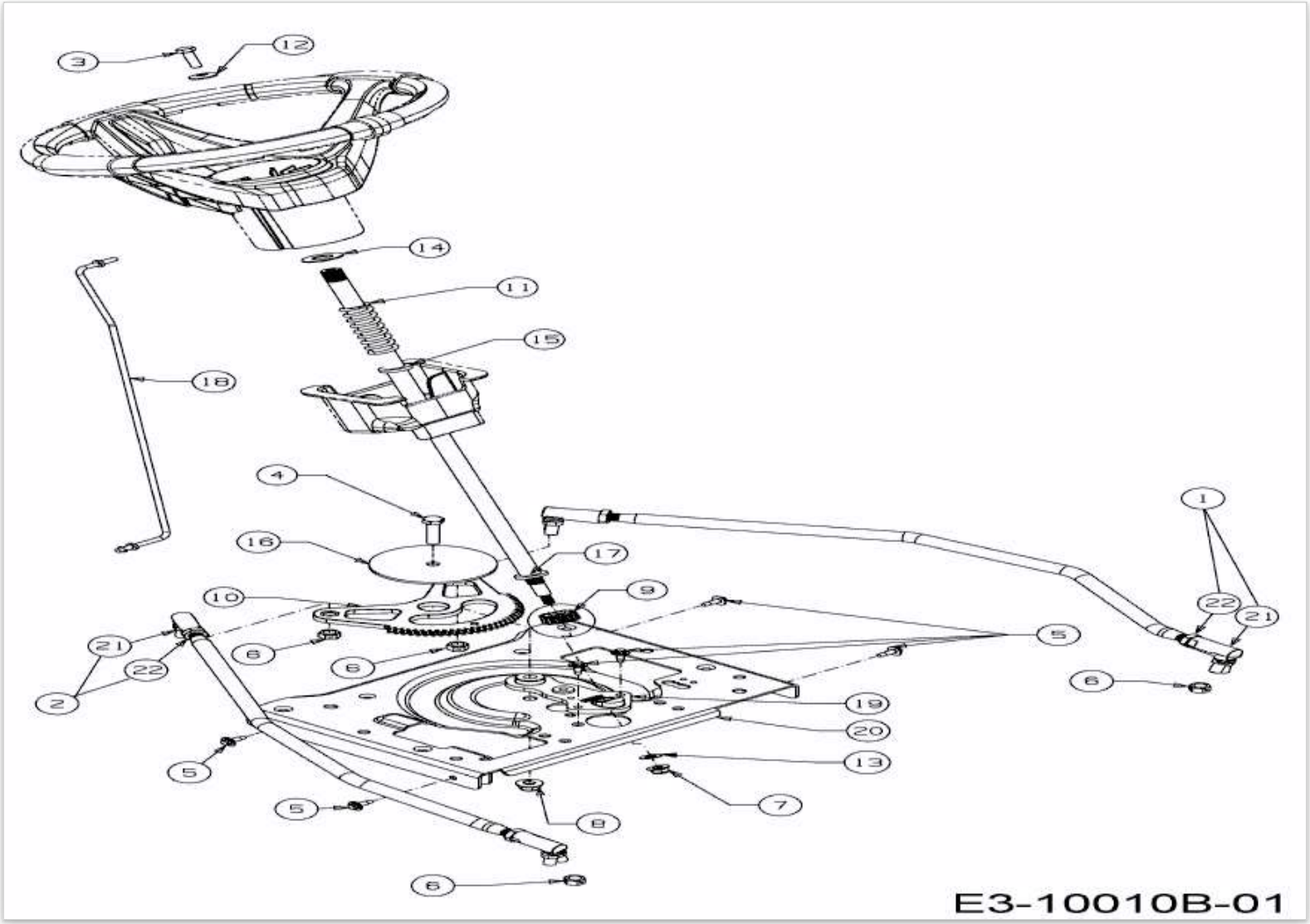106.230 H > 13AQA1VR350 (2018) > LENKUNG