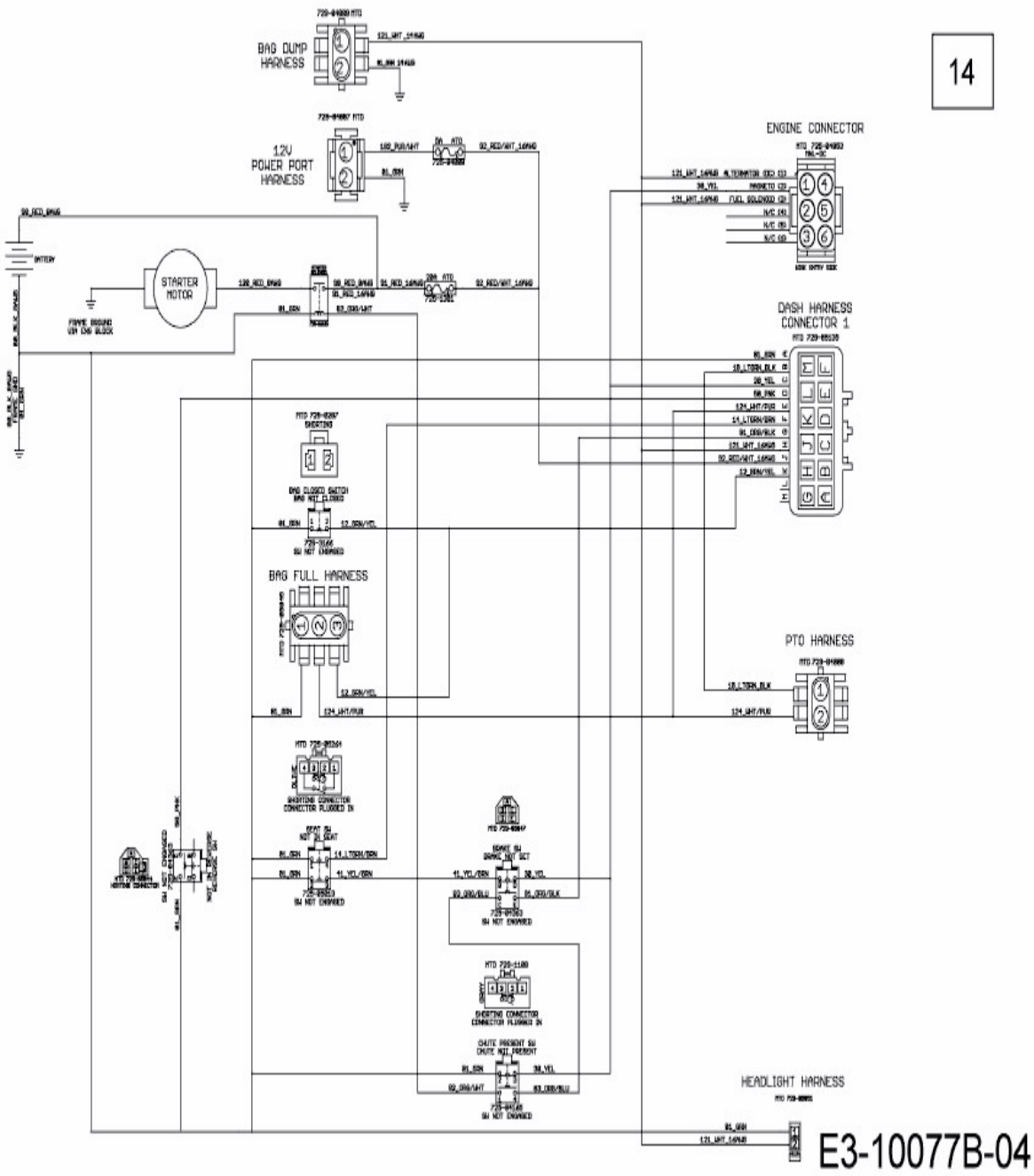
14
BAG DUMP HARNESS
12V POWER PORT HARNESS
ENGINE CONNECTOR
STARTER MOTOR
DASH HARNESS CONNECTOR 1
BAG FULL HARNESS
PTO HARNESS
HEADLIGHT HARNESS
E3-10077B-04