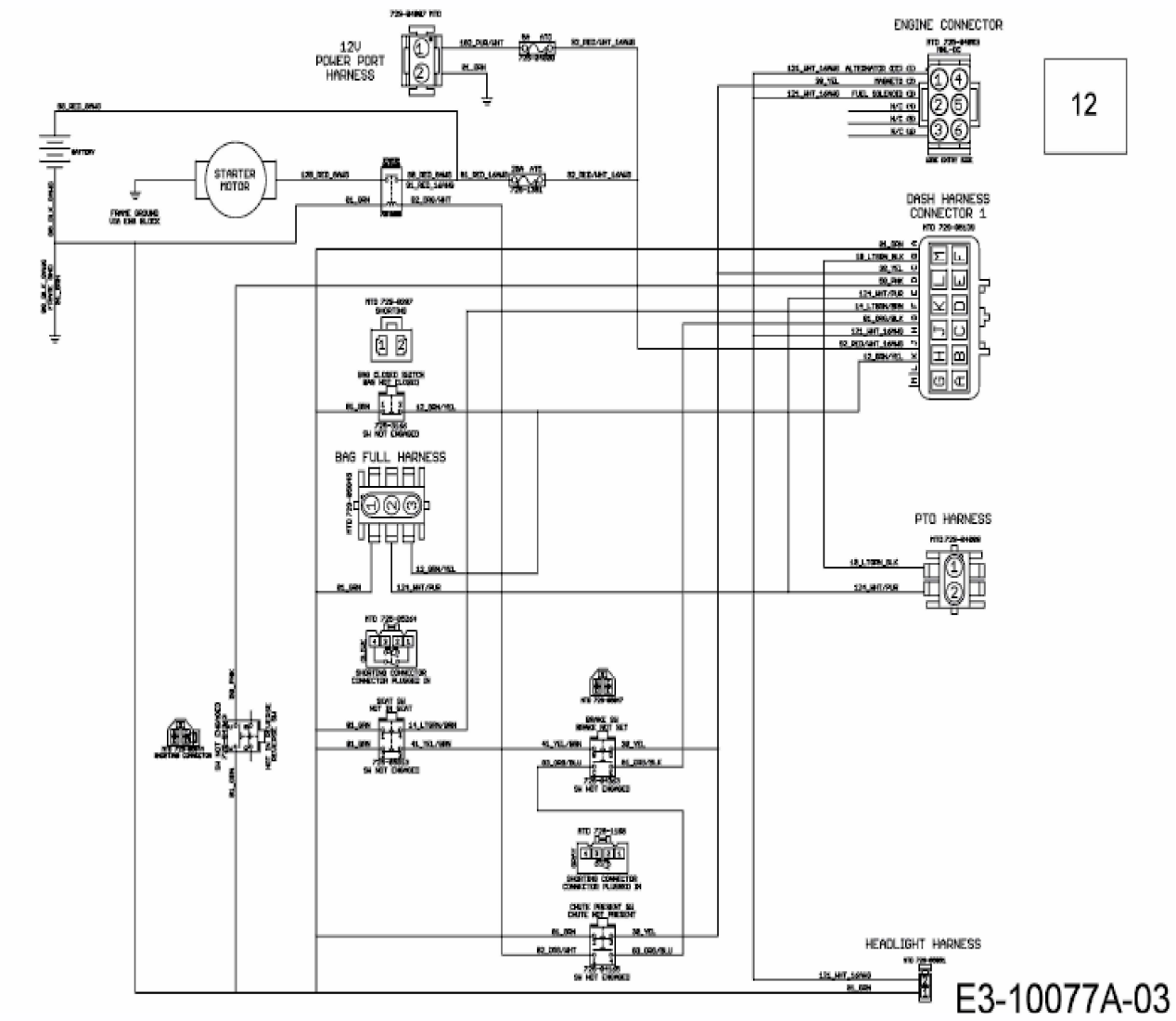
12V
POWER PORT
HARNESS
ENGINE CONNECTOR
12
STARTER
MOTOR
DASH HARNESS
CONNECTOR 1
BAG FULL HARNESS
PTO HARNESS
HEADLIGHT HARNESS
E3-10077A-03