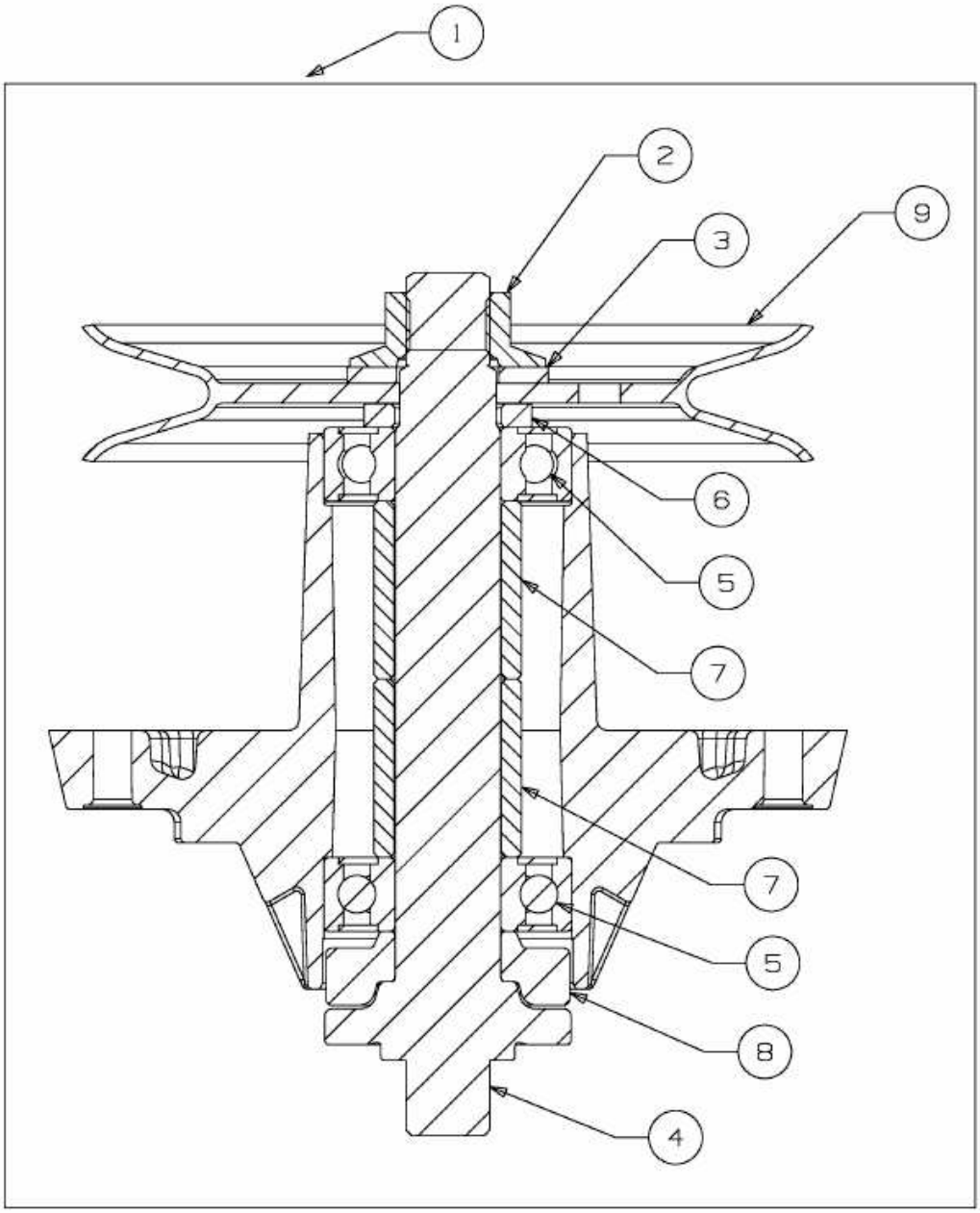

E3-07595B-01