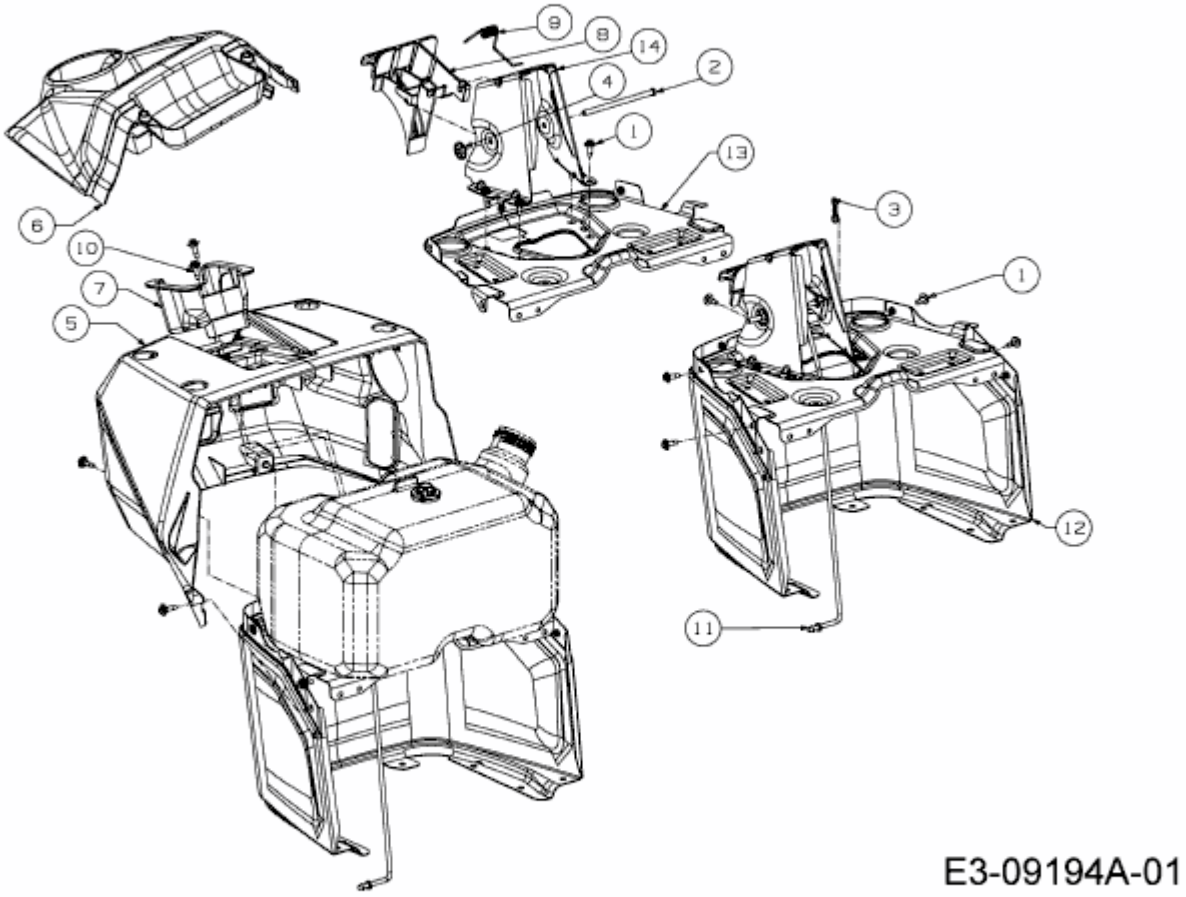LX 42" KH > 13APA1CS330 (2015) > ARMATURENBRETT