EXPERT 107.200 H > 13AP93WS350 (2015) > VORDERACHSE

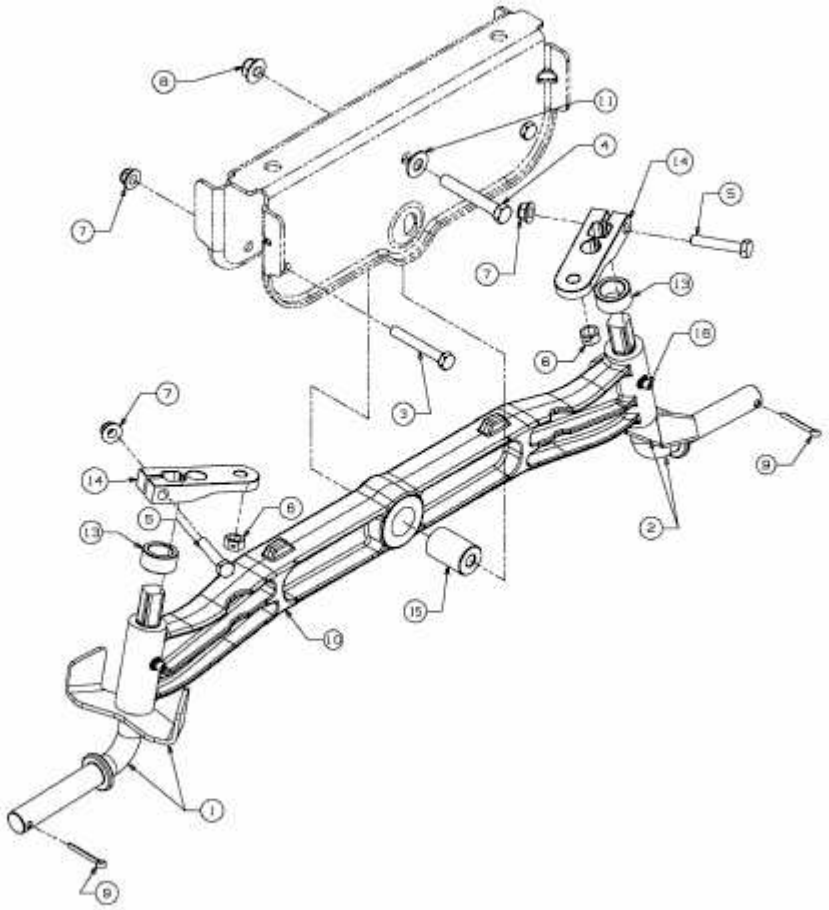

E3-04984B-01