B 155 > 13AP678G678 (2002) > FAHRANTRIEB, MOTORKEILRIEMENSCHEIBE, PEDAL

Models 660 thru 679

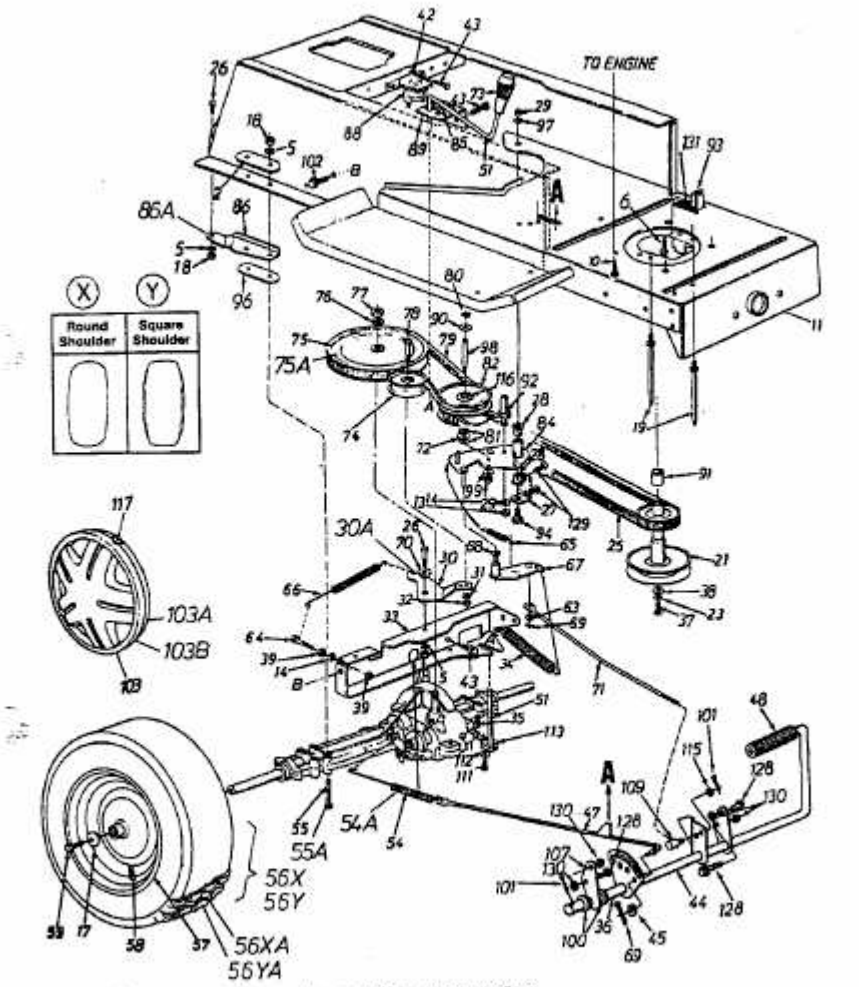

IMPORTANT: For a proper working machine, use Factory Approved Parts.
V-BELTS are specially designed to engage and disengage safely. A substitute (non OEM) V-belt can be dangerous by not disengaging completely.

E4-00793 A