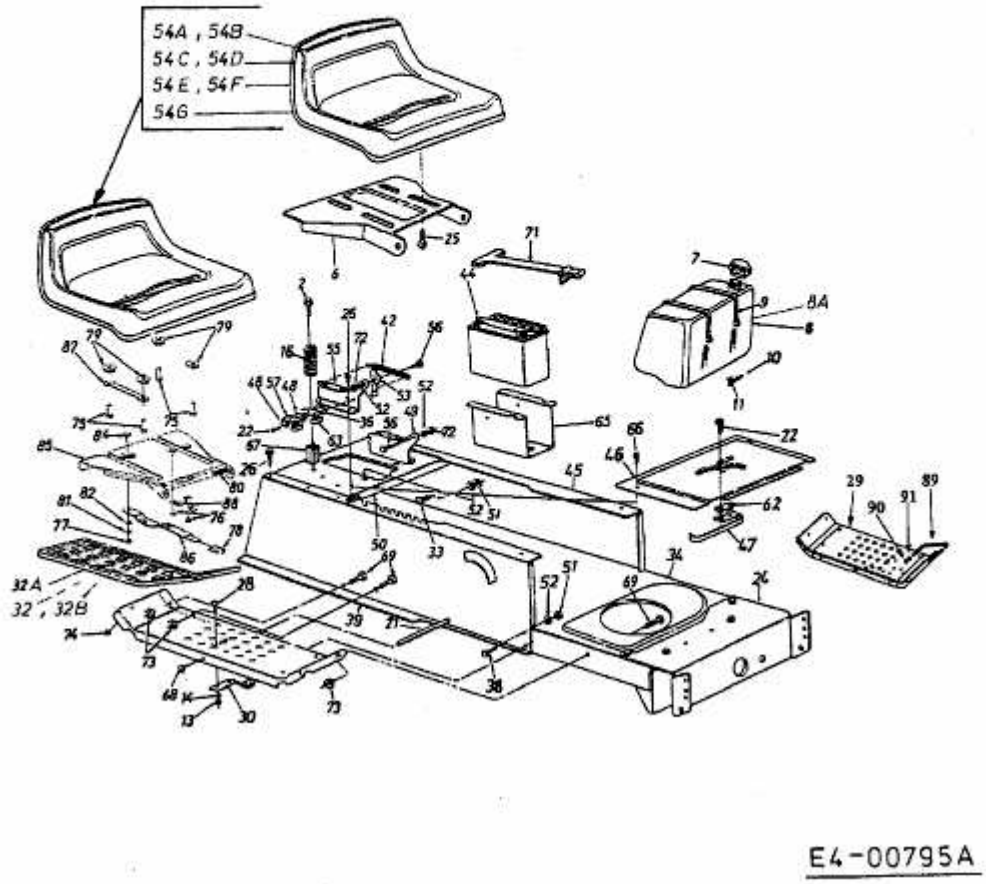Models 660 thru 679