16/107 > 13AP660G659 (2002) > BATTERIE, SITZ, TANK
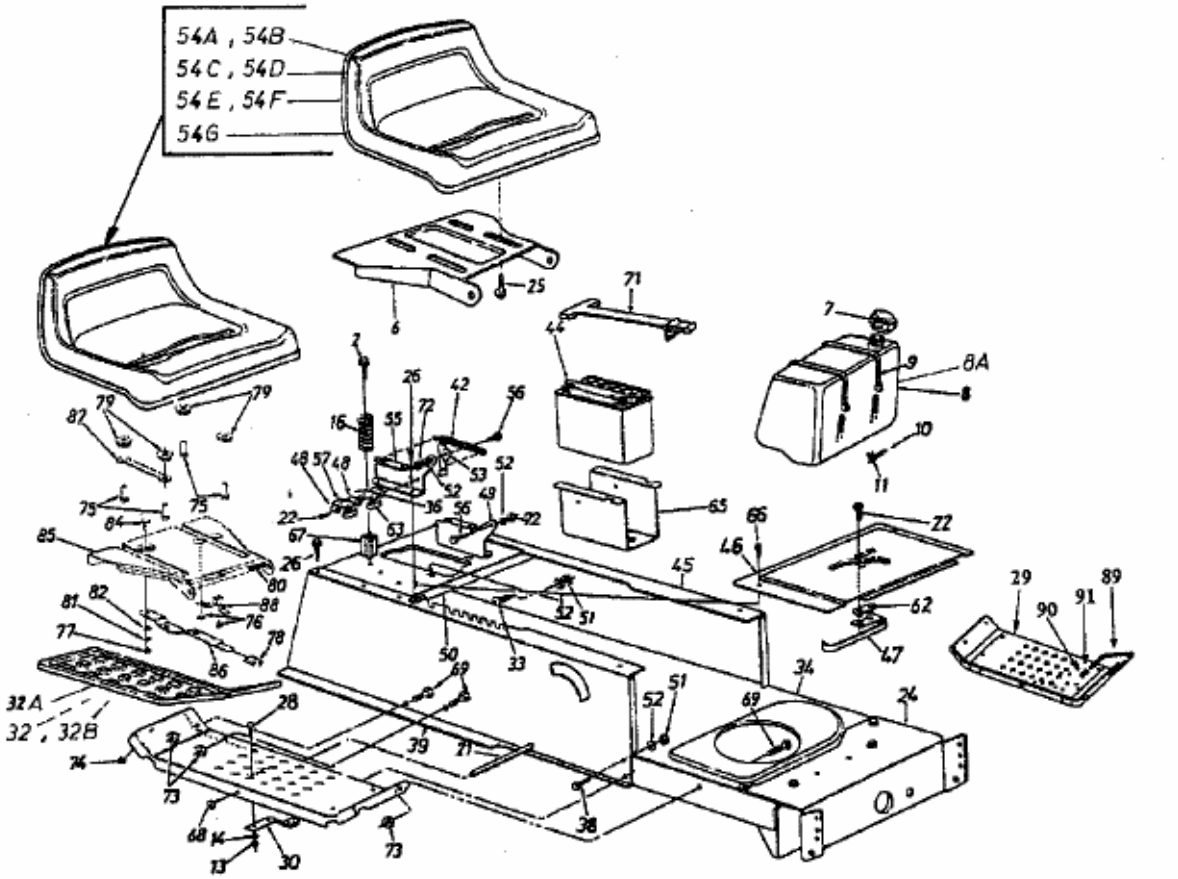
Models 660 thru 679