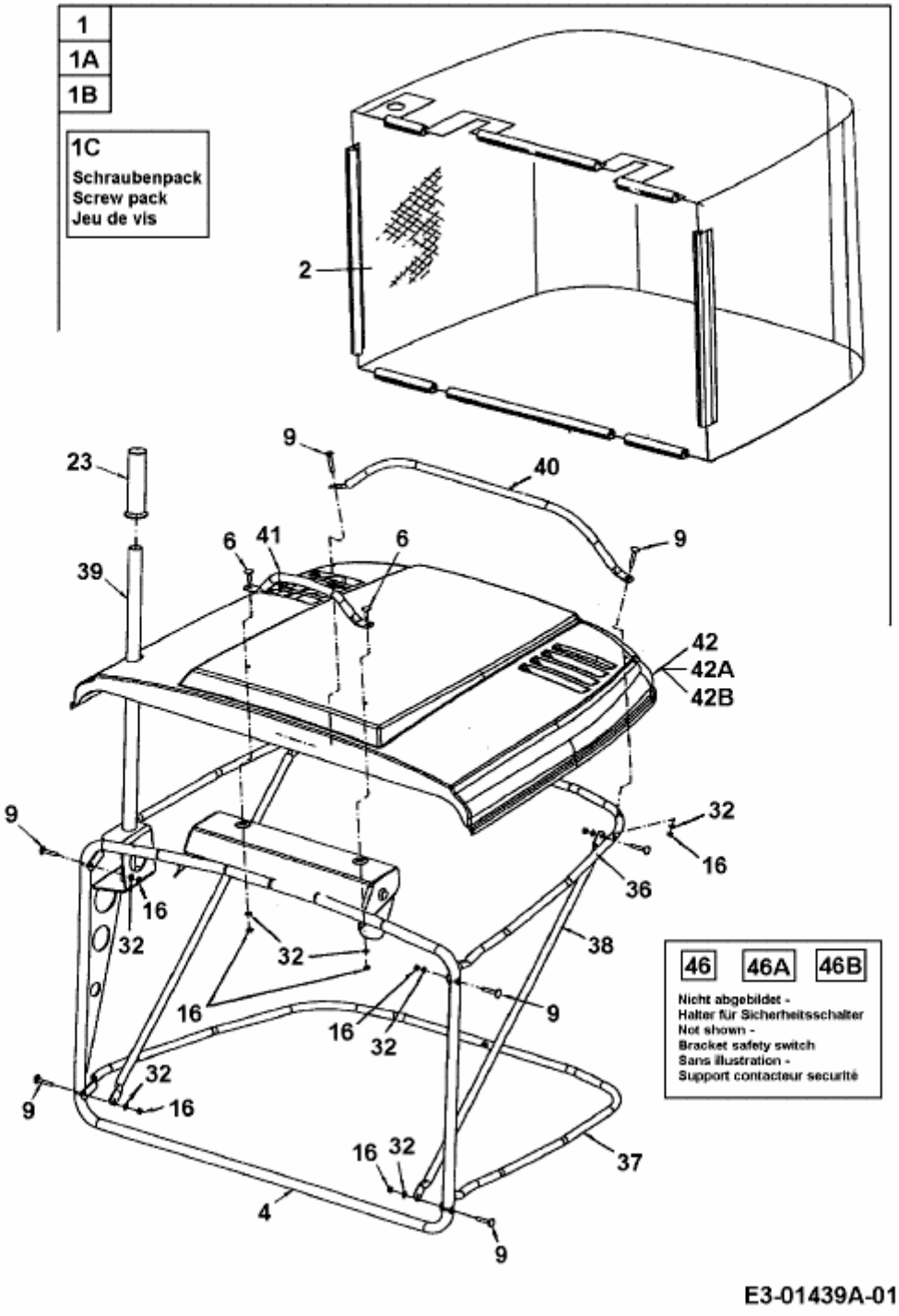704 > 13AP478E611 (2002) > GRASFANGKORB