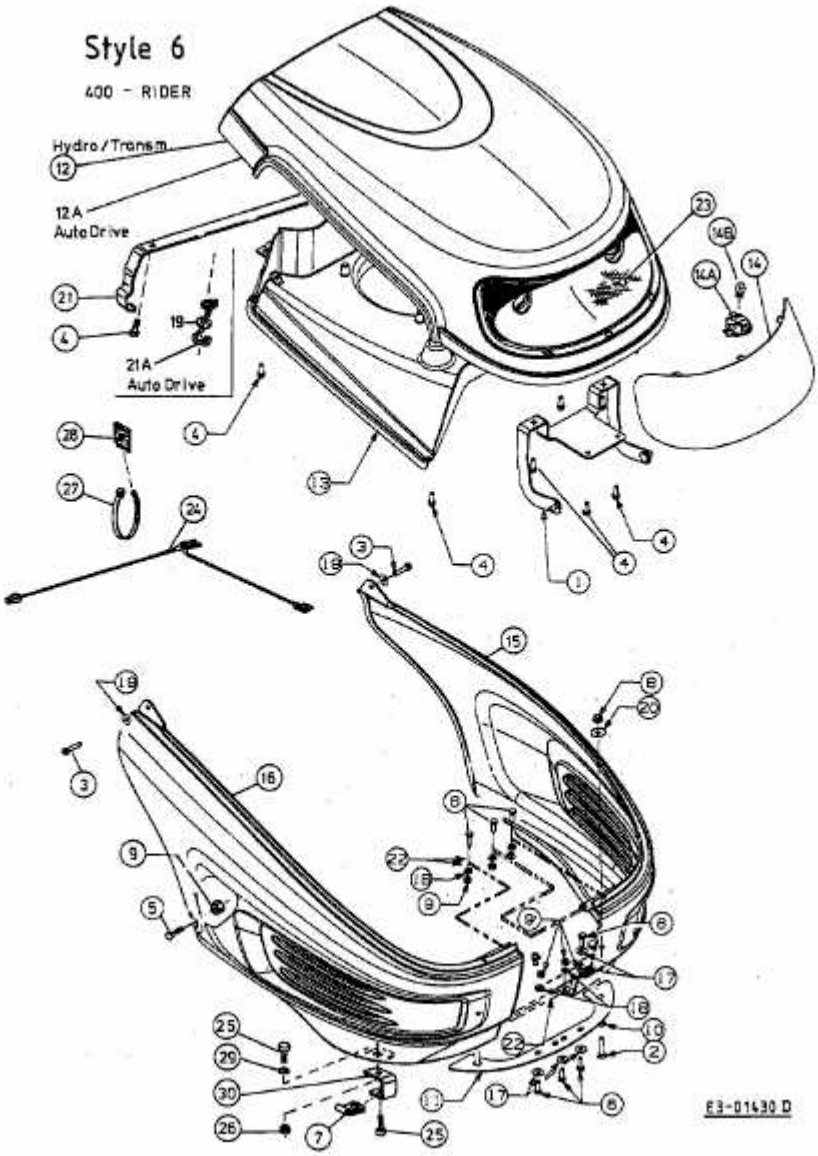SPRINT SLX 76 RH > 13AP416A690 (2000) > MOTORHAUBE 6-STYLE