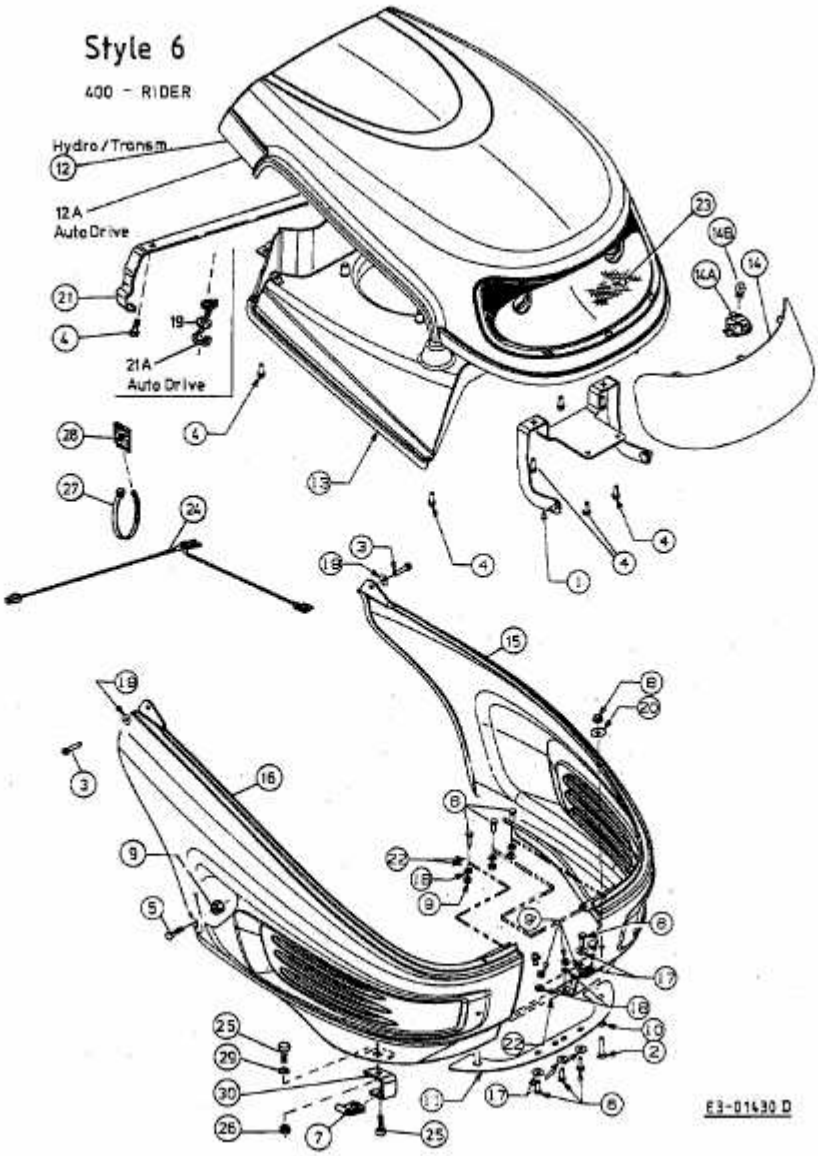SPRINT SLX 76 RH > 13AP416A690 (1999) > MOTORHAUBE 6-STYLE