Style 4

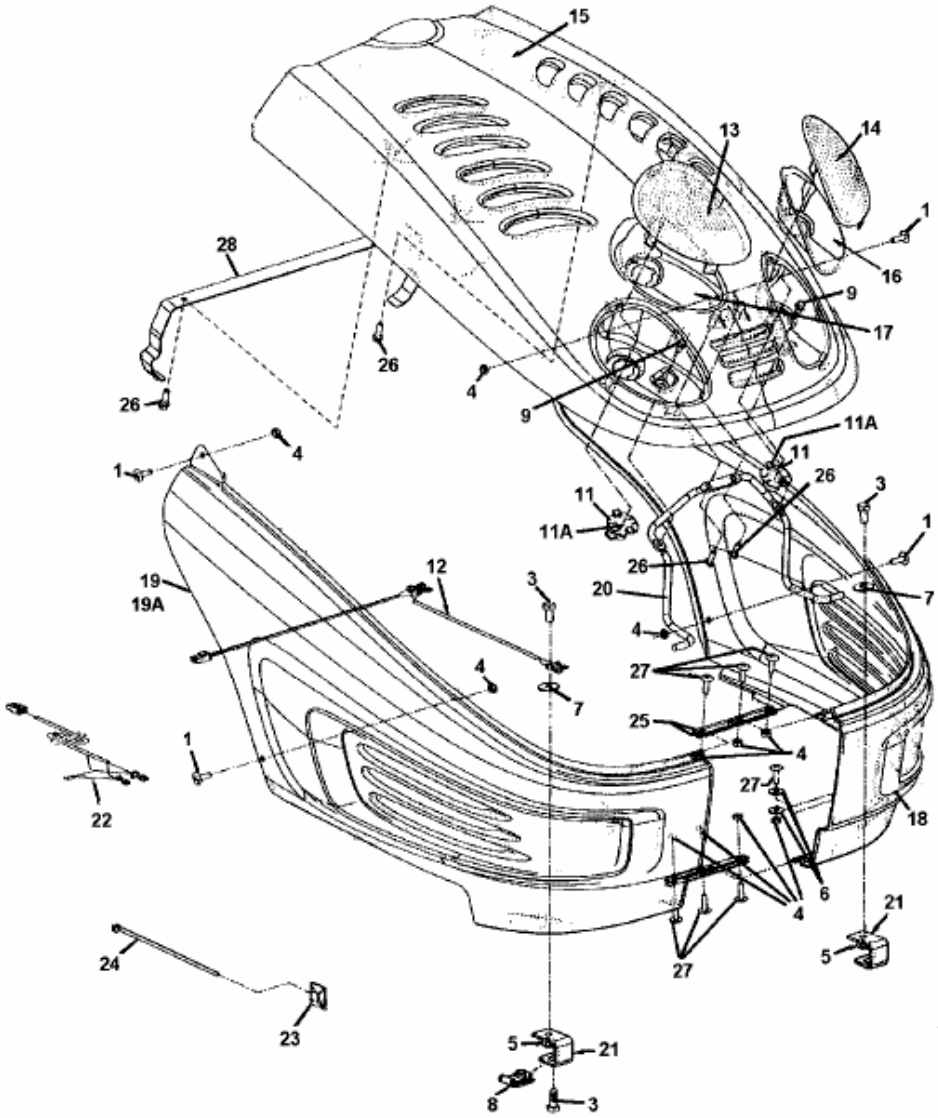

fig

E3-01368B-01