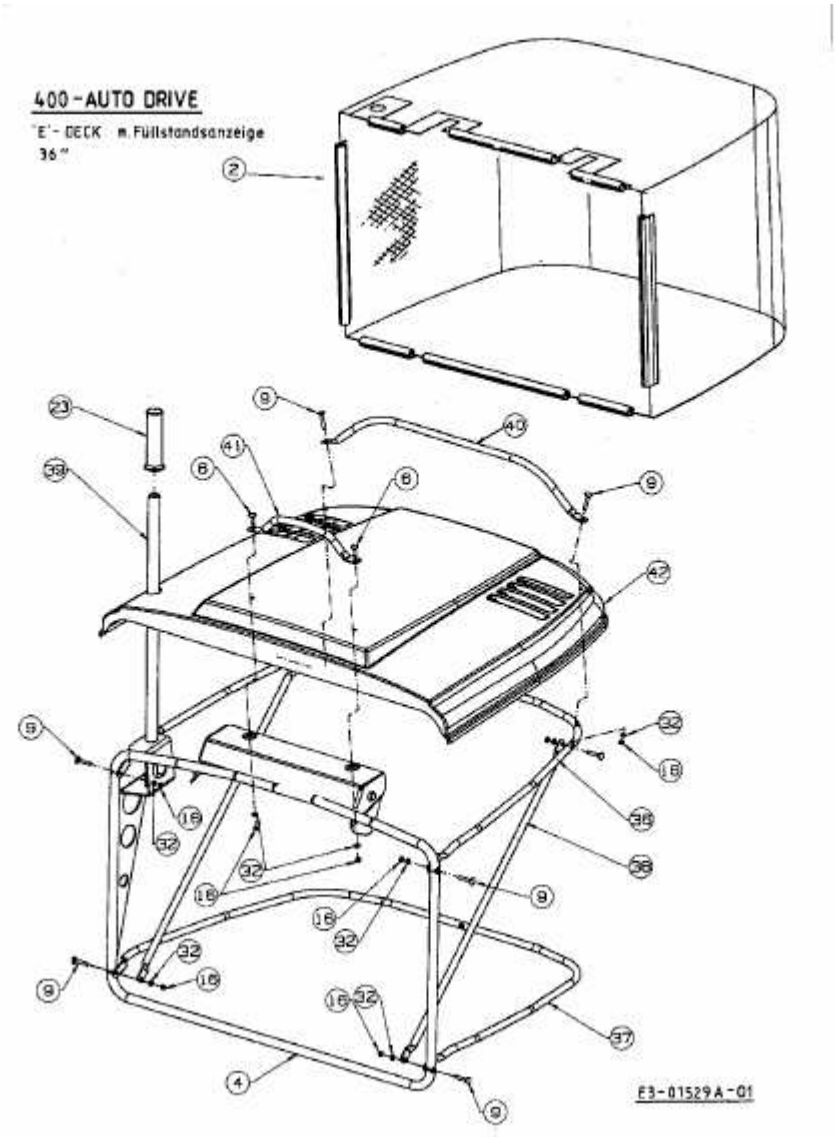SLX 92 RA > 13AP406E690 (2002) > GRASFANGKORB