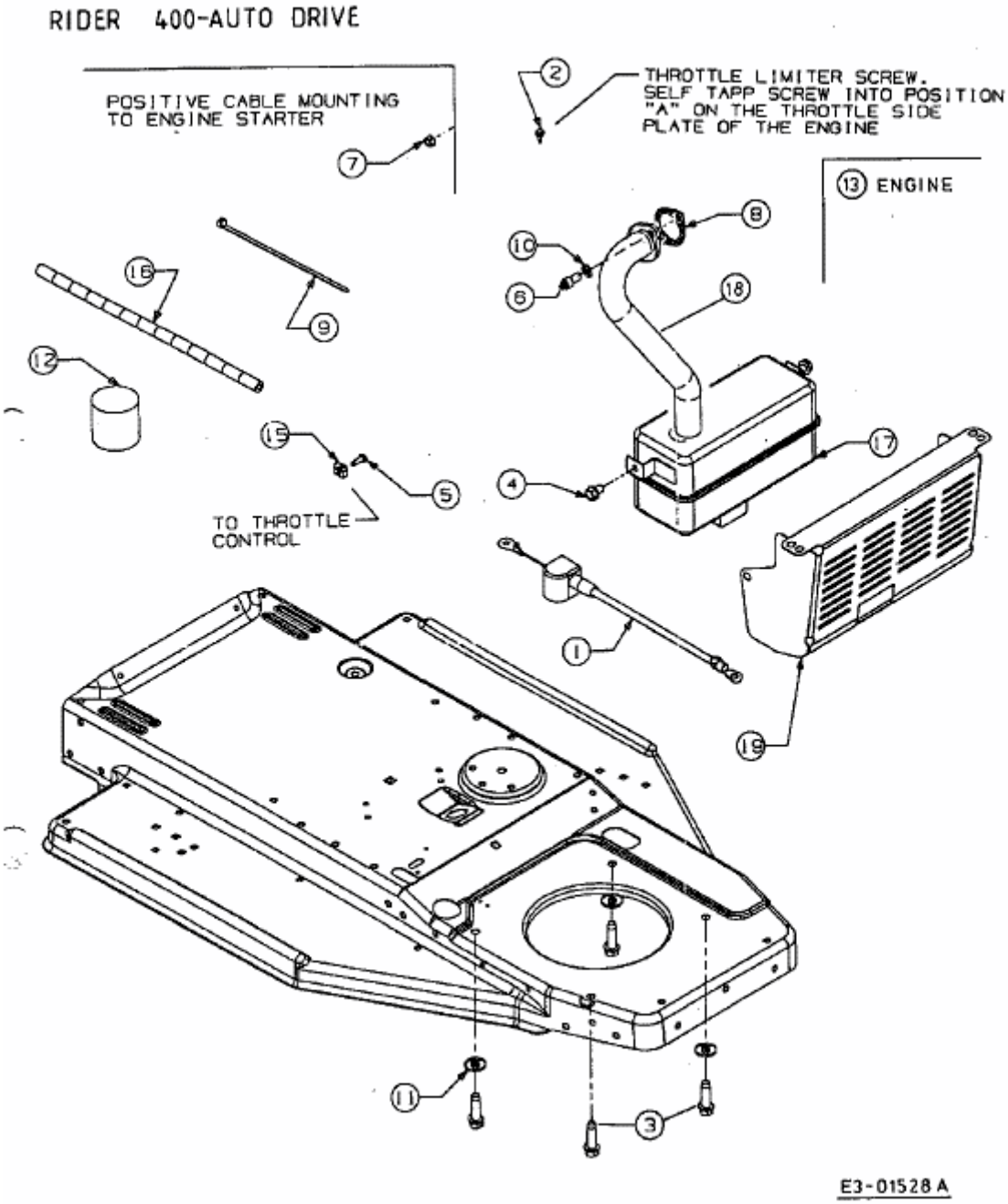
RIDER 400-AUTO DRIVE
POSITIVE CABLE MOUNTING TO ENGINE STARTER
THROTTLE LIMITER SCREW. SELF TAPP SCREW INTO POSITION "A" ON THE THROTTLE SIDE PLATE OF THE ENGINE
13 ENGINE
TO THROTTLE CONTROL
E3-01528 A