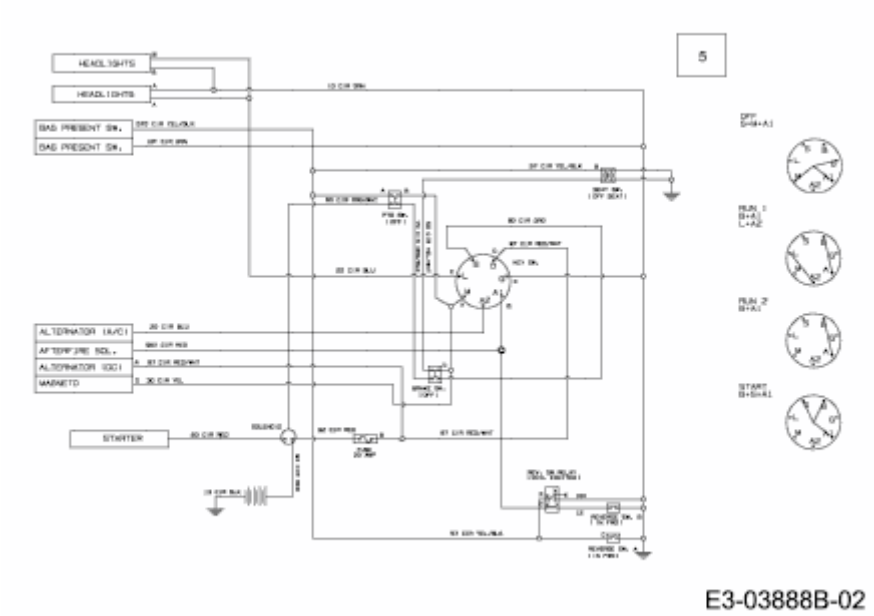BL 175/105 AT > 13AN781N684 (2008) > SCHALTPLAN