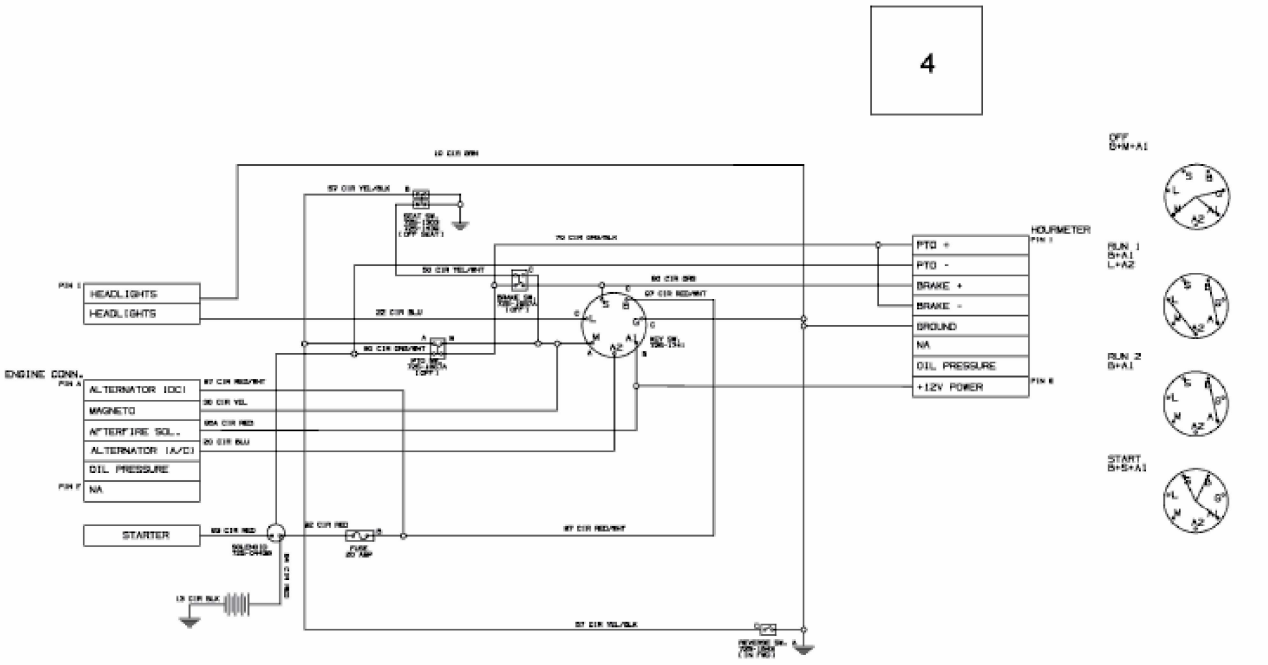
4
HEADLIGHTS
HEADLIGHTS
ENGINE CONN.
ALTERNATOR (DC)
MAGNETO
AFTERFIRE SOL.
ALTERNATOR (A/C)
OIL PRESSURE
NA
STARTER
HOURMETER
PTO +
PTO -
BRAKE +
BRAKE -
GROUND
NA
OIL PRESSURE
+12V POWER
OFF
B+M+A1
RUN 1
B+A1
L+A2
RUN 2
B+A1
START
B+S+A1

E3-09145A-02