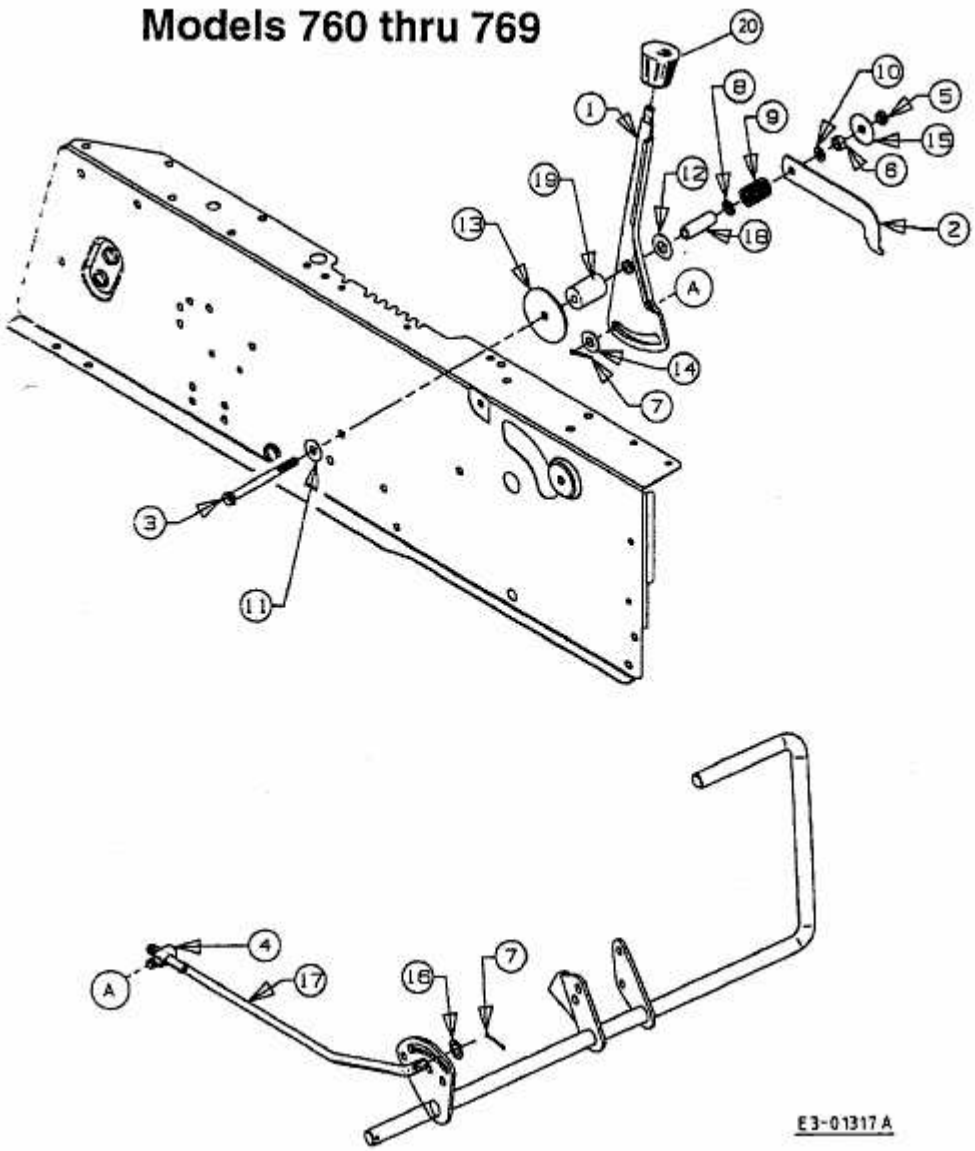
Models 760 thru 769
20
10
5
8
9
1
15
6
19
12
2
13
18
A
14
7
3
11
4
A
17
16
7
E3-01317A