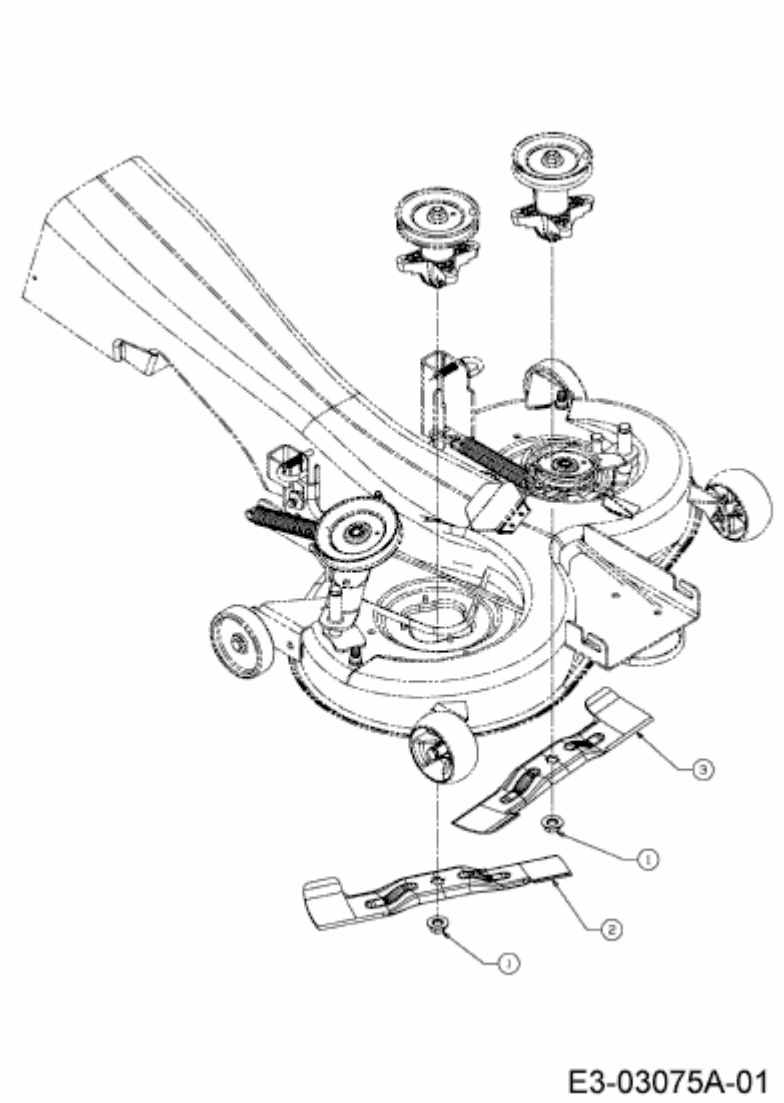13AN491E684 (2008) > HIGH LIFT MESSER