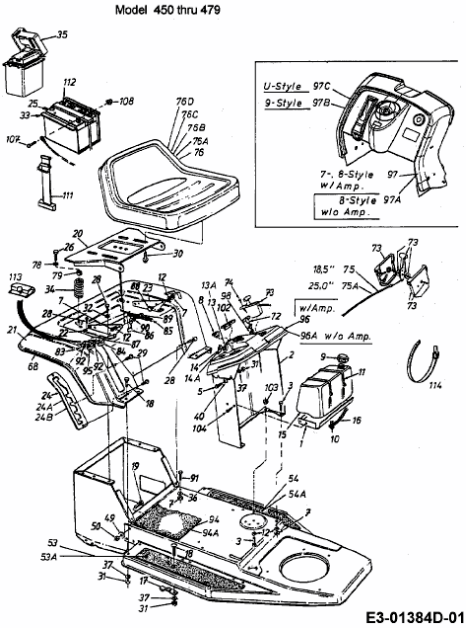
Model 450 thru 479
U-Style 97C
9-Style 97B
7-, 8-Style w/Amp. 97
8-Style w/o Amp. 97A
18,5" 75
25,0" 75A
w/Amp. 96
96A w/o Amp.
E3-01384D-01