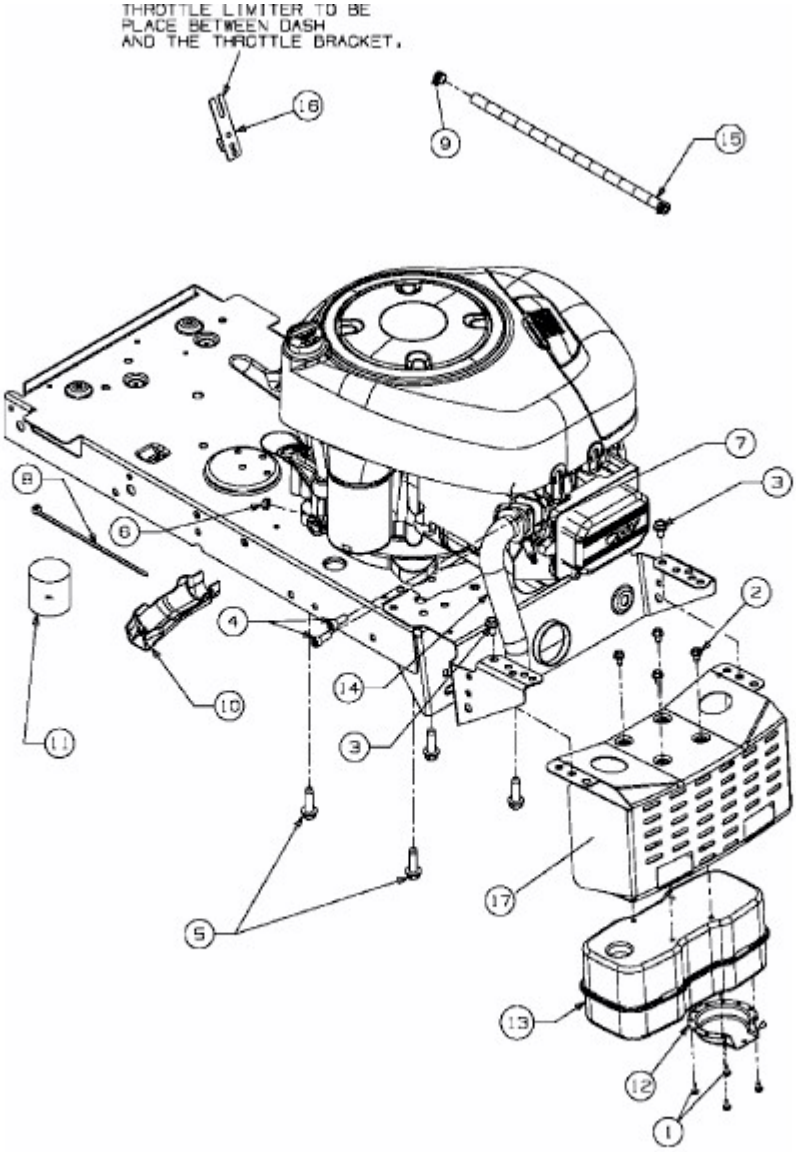
THROTTLE LIMITER TO BE
PLACE BETWEEN DASH
AND THE THROTTLE BRACKET.
16
9
15
7
3
8
6
2
4
14
10
11
3
17
5
13
12
1

E3-03296A-01