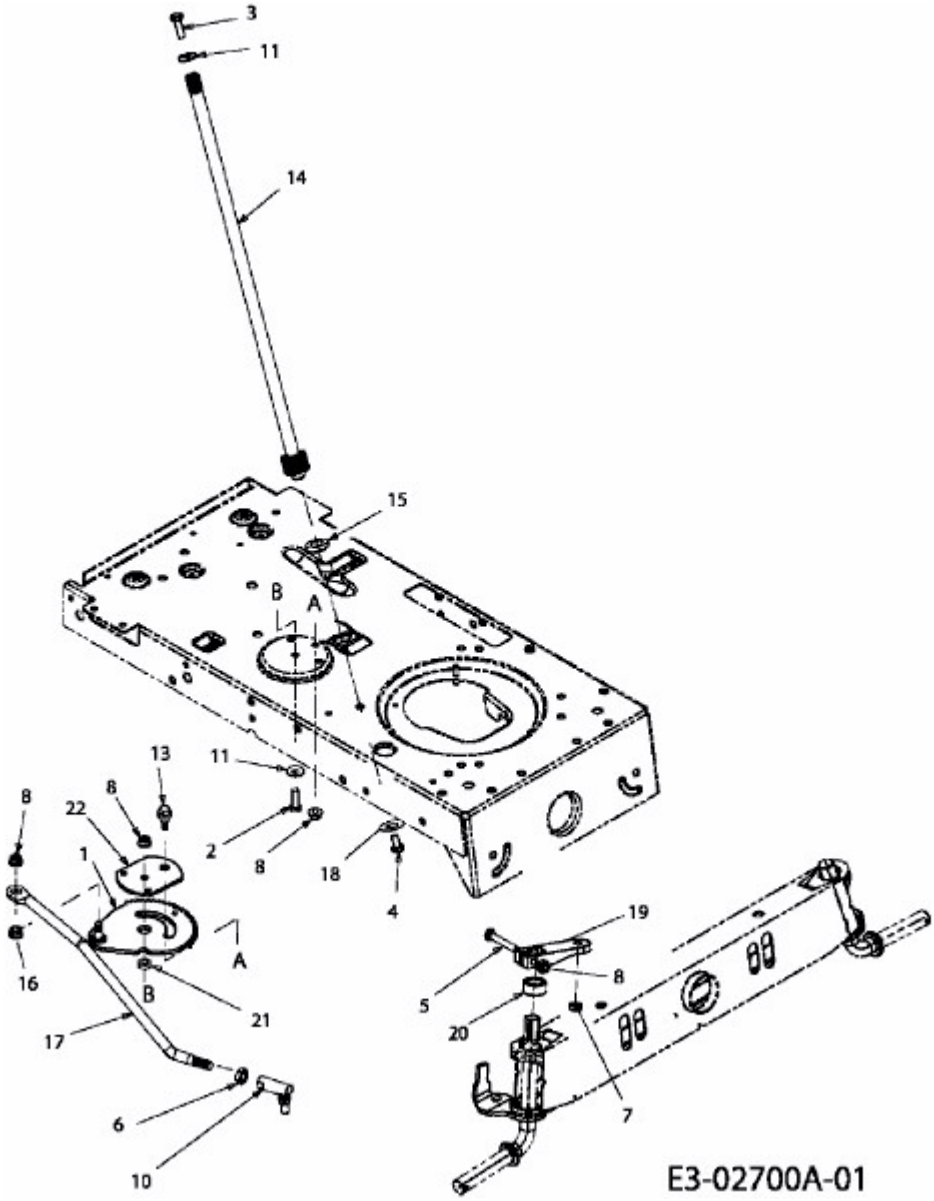FORMULA 108/15.5 H > 13AM799G637 (2006) > LENKUNG