TN 7155 > 13AM77YN643 (2010) > SCHALTPLAN

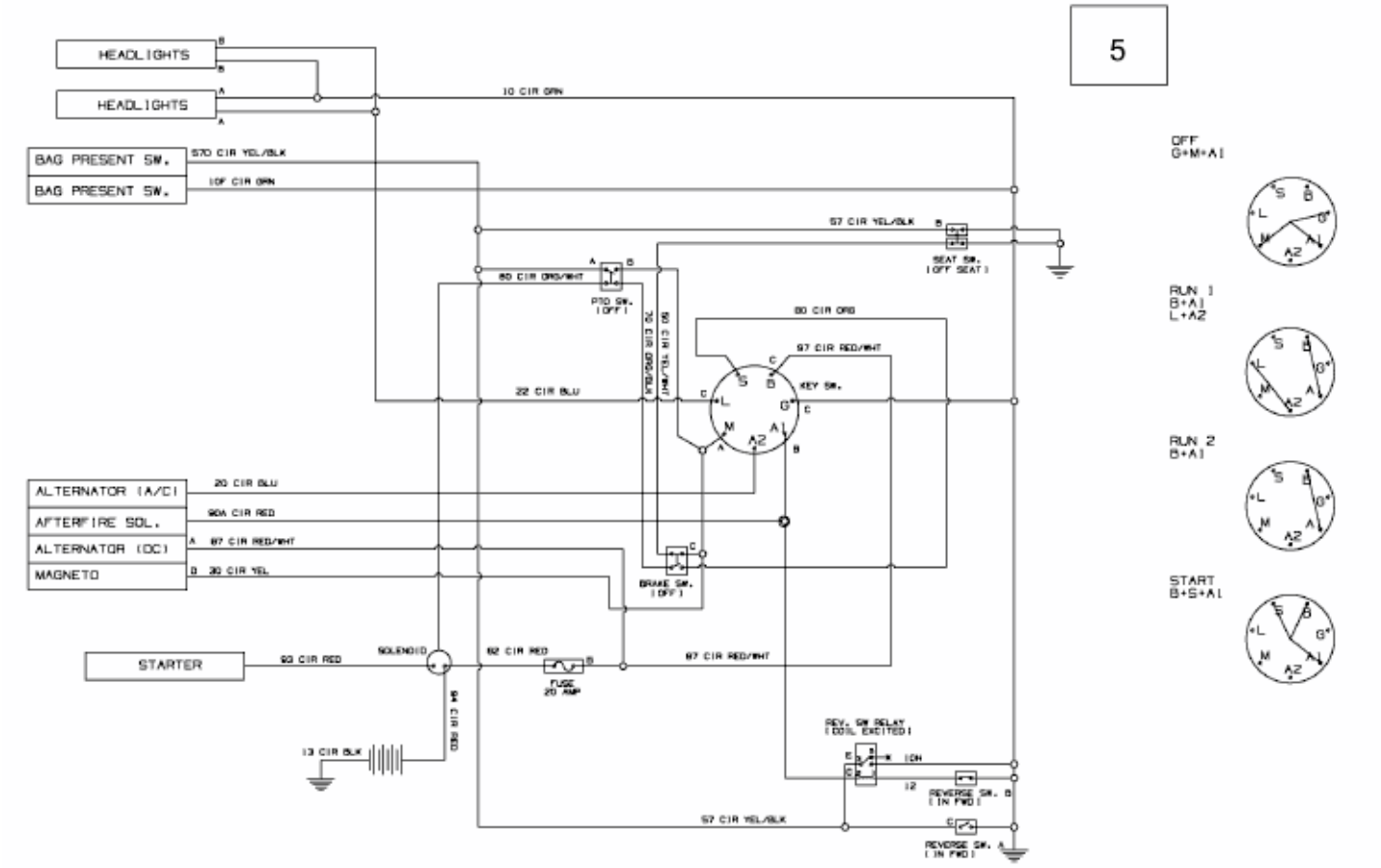

E3-03888D-02