RT 155-92 H > 13AM77TE694 (2014) > GRASFANGVORRICHTUNG

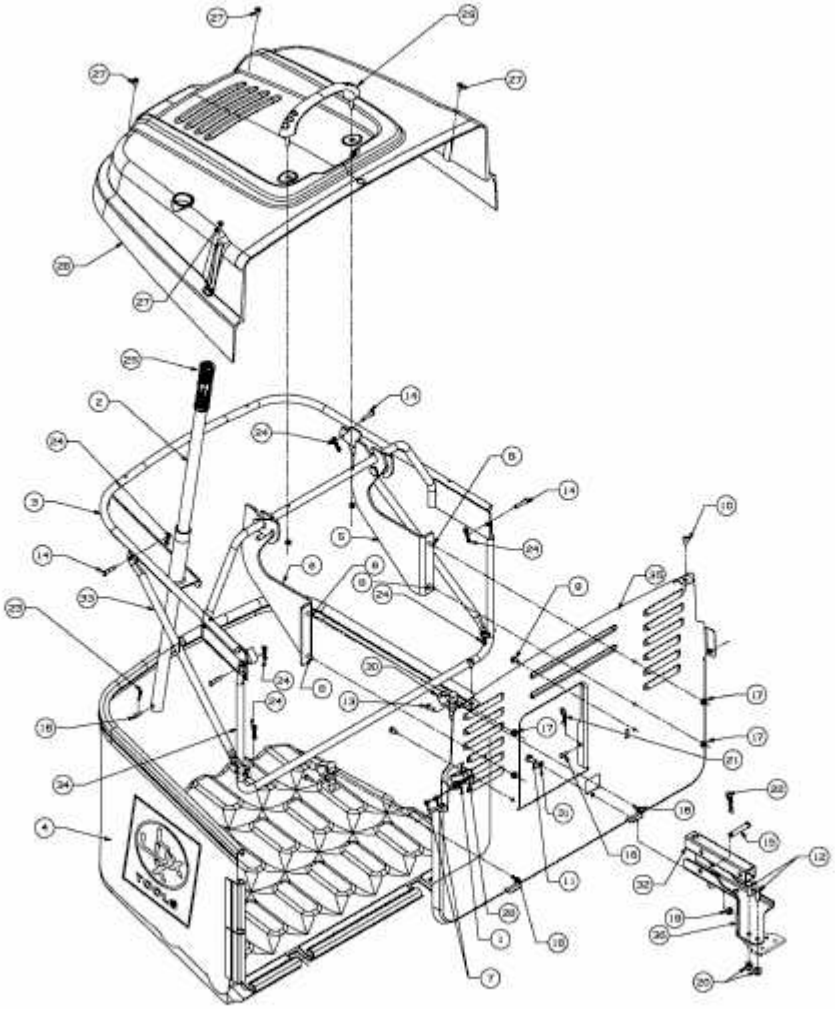

E3-06659C-01