LN 155 > 13AM773N600 (2009) > SCHALTPLAN

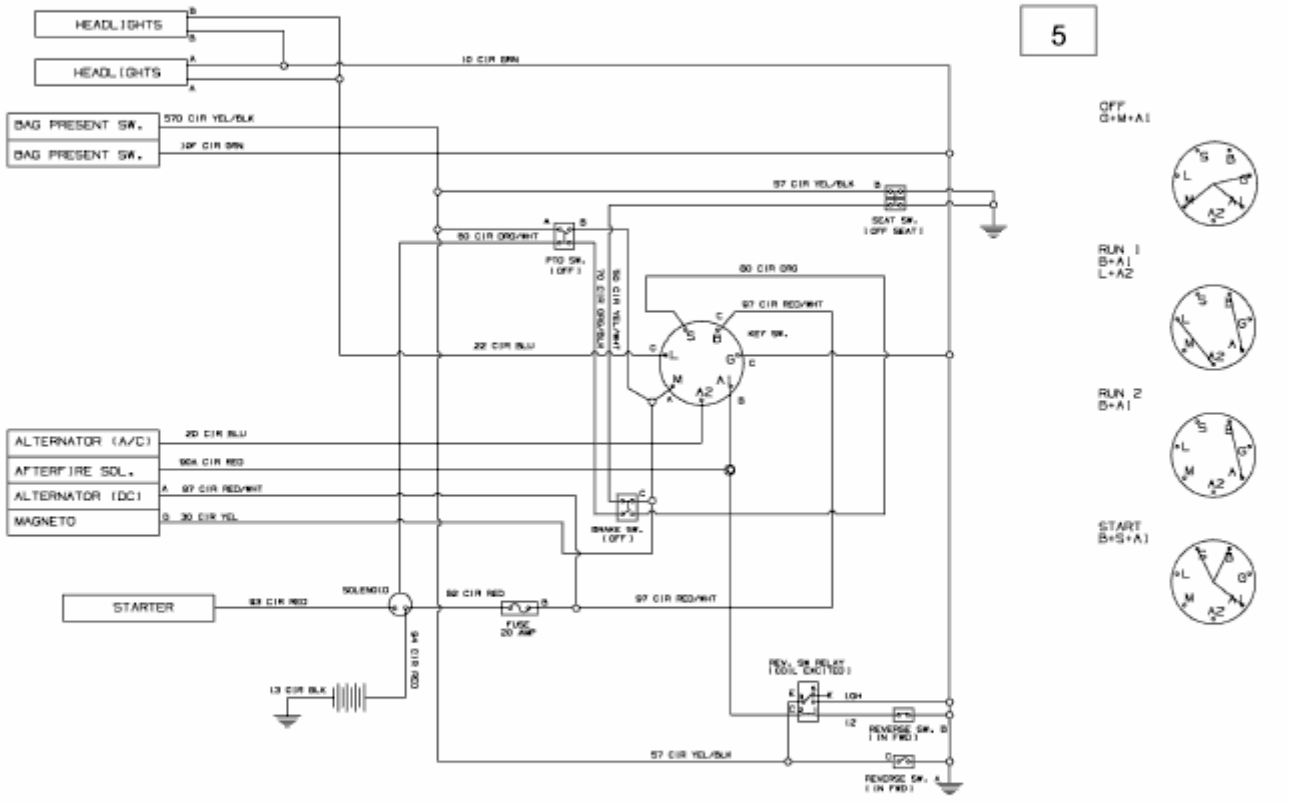

E3-03888C-02