LN 155 > 13AM773N600 (2008) > SCHALTPLAN

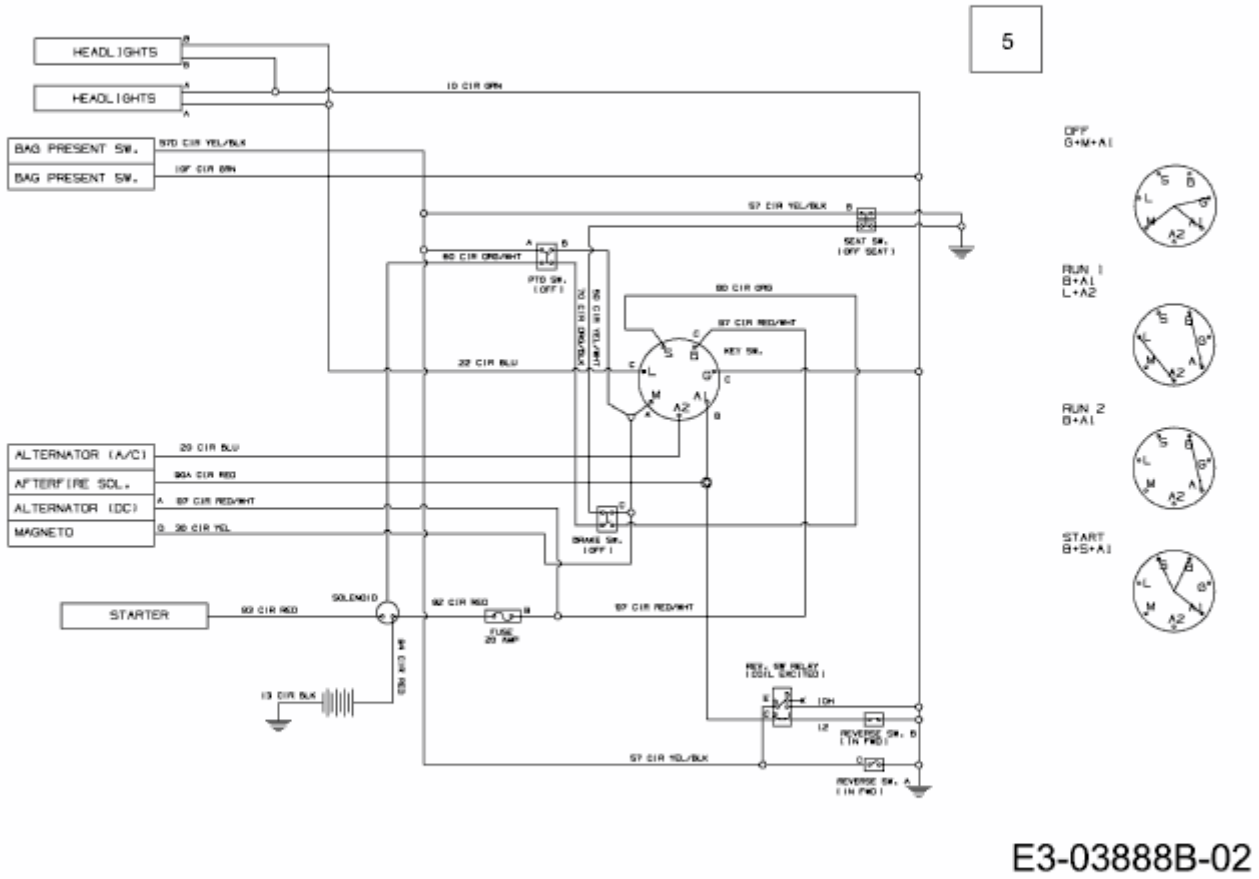

E3-03888B-02