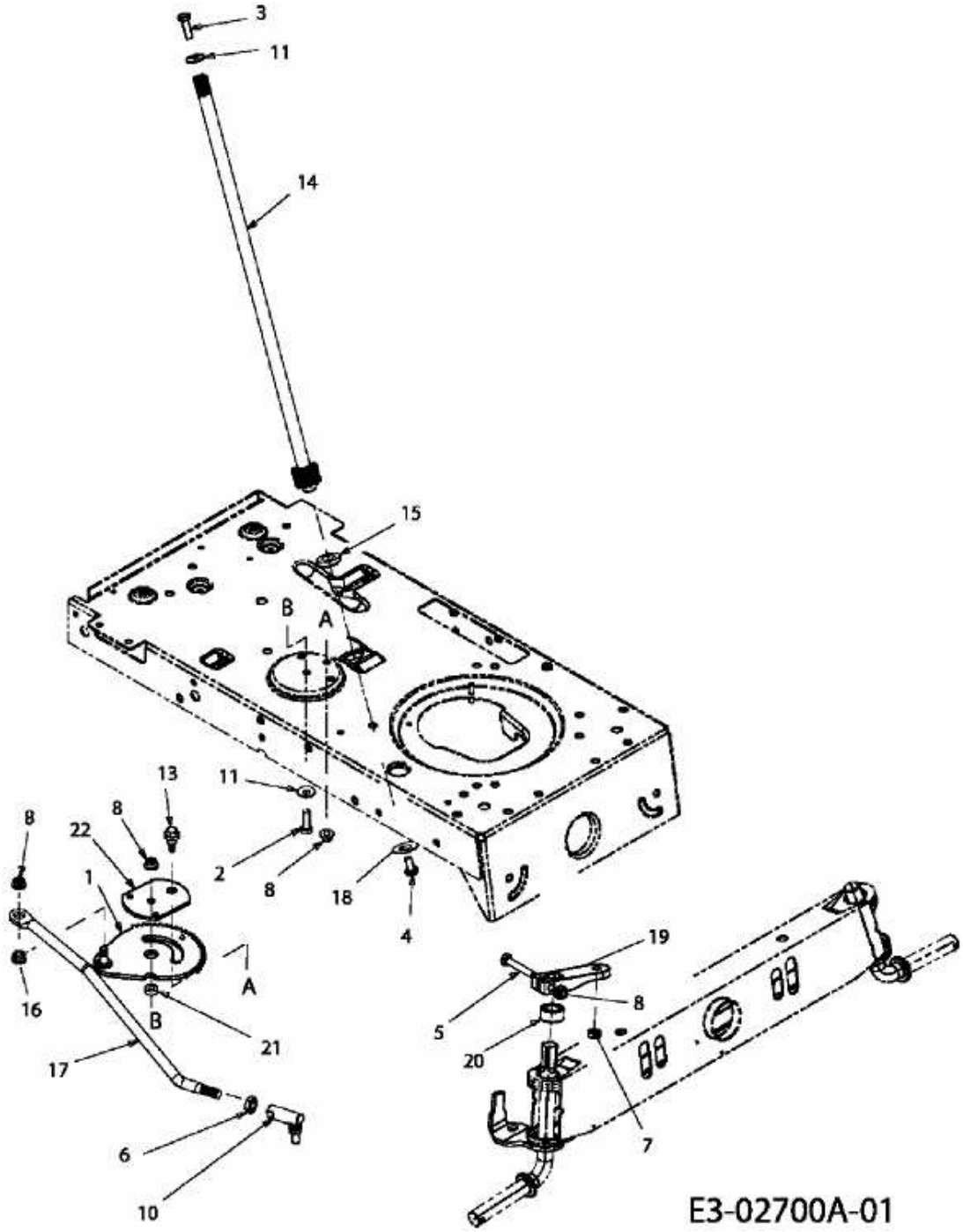SPIDER 76/145 > 13AM773C631 (2008) > LENKUNG