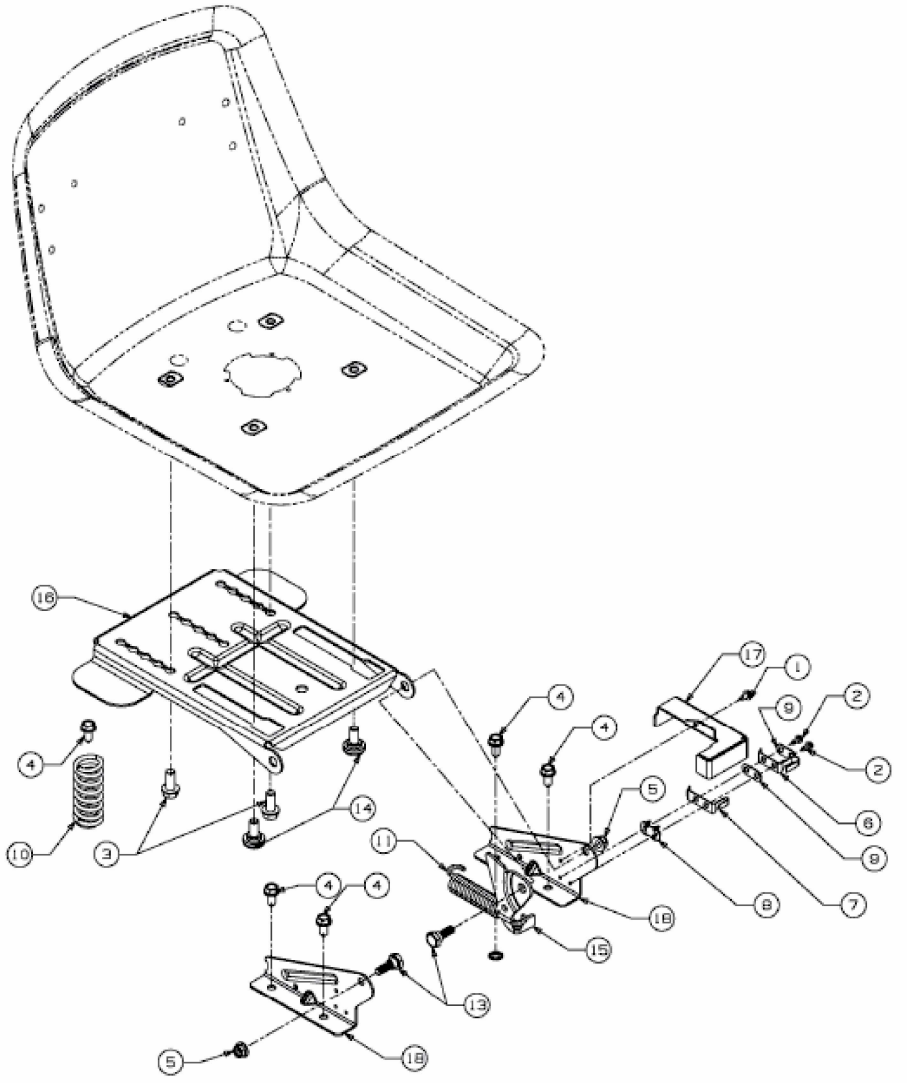

E3-04368B-01