475 > 13AL475C678 (2001) > MOTORZUBEHÖR

Rider Models 400
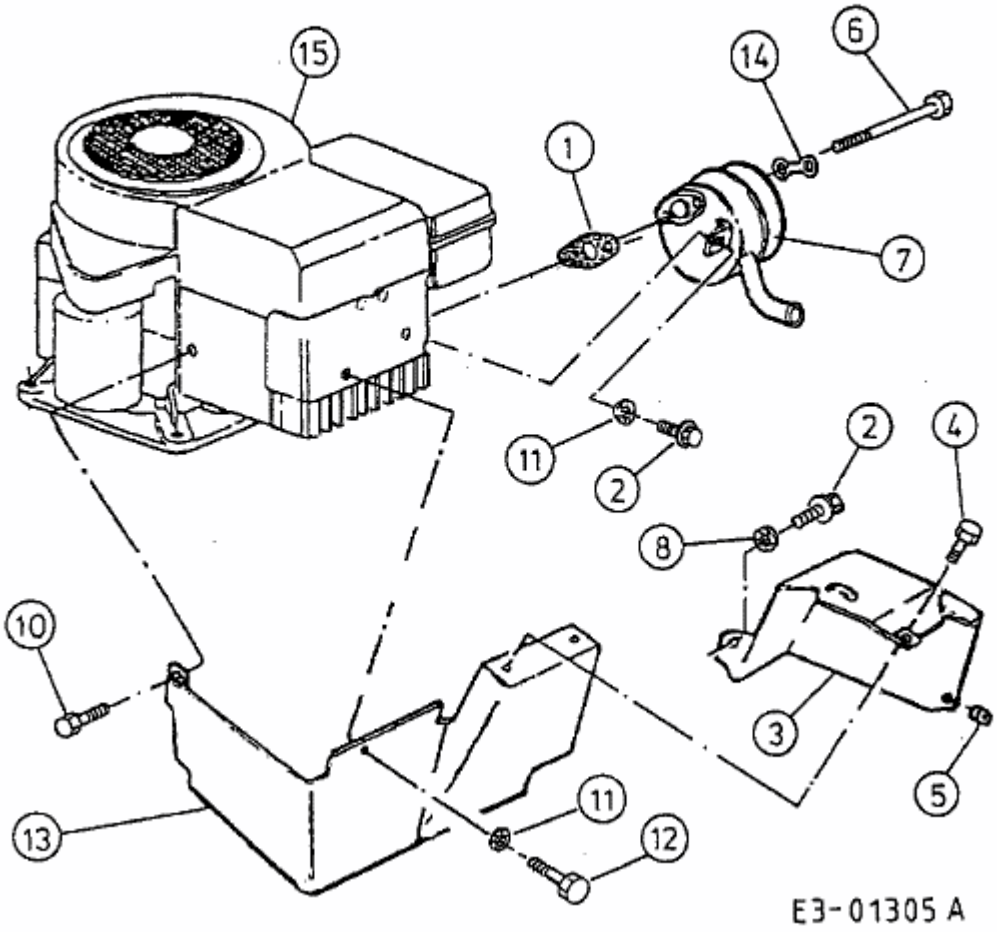
Engine B&S 28T707-1154-E1