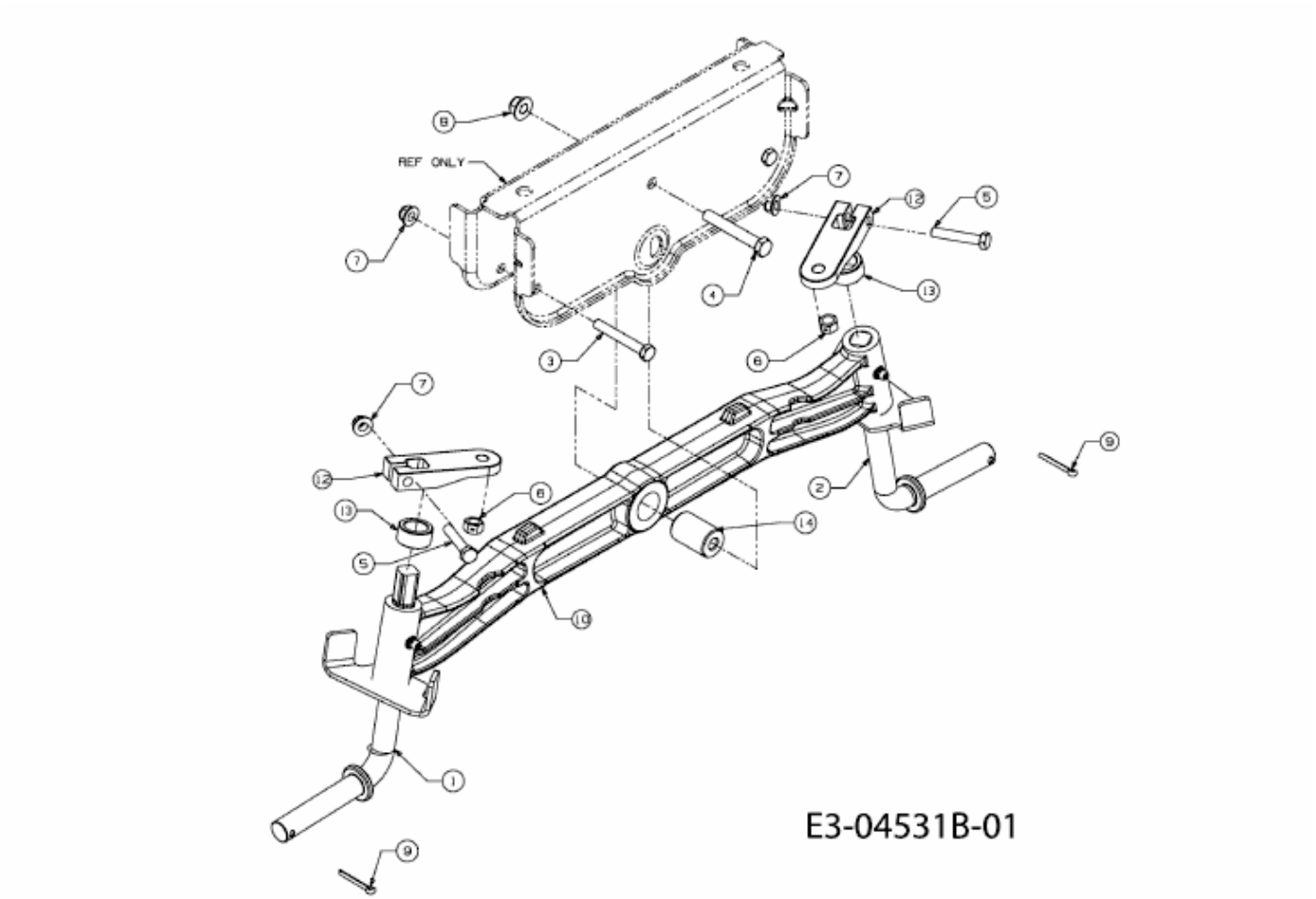MF 50-25 SD > 13AI92CP695 (2010) > VORDERACHSE