MF 48-24 RD > 13AI91GJ695 (2014) > VORDERACHSE

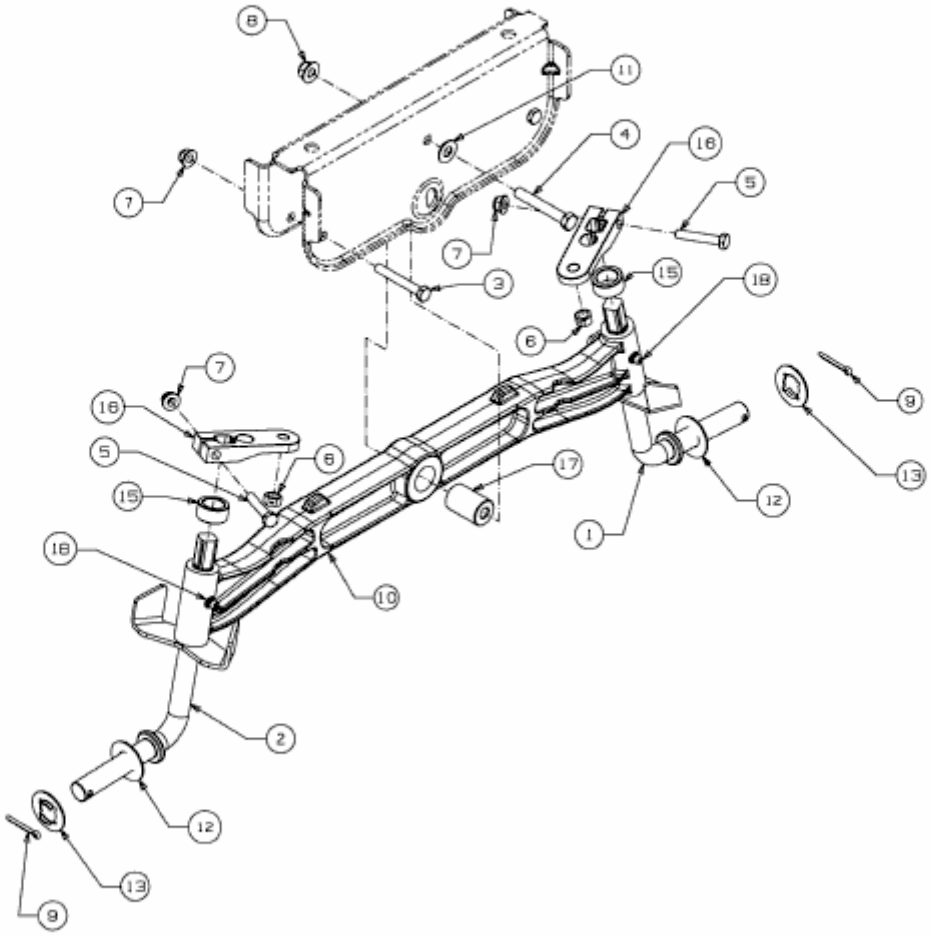

E3-07523C-01